SERVICE MANUAL

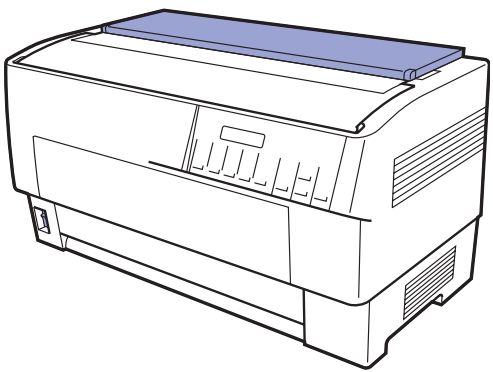

Serial Impact Dot Matrix Printer

EPSON DFX-9000

EPSON
EXCEED YOUR VISION

SEDM04003

Notice

- All rights reserved. No part of this manual may be reproduced, stored in a retrieval system, or transmitted in any form or by any means electronic, mechanical, photocopying, or otherwise, without the prior written permission of SEIKO EPSON CORPORATION.
- All effort have been made to ensure the accuracy of the contents of this manual. However, should any errors be detected, SEIKO EPSON would greatly appreciate being informed of them.
- The contents of this manual are subject to change without notice.
- The above not withstanding SEIKO EPSON CORPORATION can assume no responsibility for any errors in this manual or the consequences thereof.

EPSON is a registered trademark of SEIKO EPSON CORPORATION.

General Notice: *Other product names used herein are for identification purpose only and may be trademarks or registered trademarks of their respective owners. EPSON disclaims any and all rights in those marks.*

Copyright © **2005 SEIKO EPSON CORPORATION.**
Imaging & Information Product Division
I&I CS/Quality Management & PL Department

PRECAUTIONS

Precautionary notations throughout the text are categorized relative to 1)Personal injury and 2) damage to equipment.

DANGER Signals a precaution which, if ignored, could result in serious or fatal personal injury. Great caution should be exercised in performing procedures preceded by DANGER Headings.

WARNING Signals a precaution which, if ignored, could result in damage to equipment.

The precautionary measures itemized below should always be observed when performing repair/maintenance procedures.

DANGER

1. ALWAYS DISCONNECT THE PRODUCT FROM THE POWER SOURCE AND PERIPHERAL DEVICES PERFORMING ANY MAINTENANCE OR REPAIR PROCEDURES.
2. NO WORK SHOULD BE PERFORMED ON THE UNIT BY PERSONS UNFAMILIAR WITH BASIC SAFETY MEASURES AS DICTATED FOR ALL ELECTRONICS TECHNICIANS IN THEIR LINE OF WORK.
3. WHEN PERFORMING TESTING AS DICTATED WITHIN THIS MANUAL, DO NOT CONNECT THE UNIT TO A POWER SOURCE UNTIL INSTRUCTED TO DO SO. WHEN THE POWER SUPPLY CABLE MUST BE CONNECTED, USE EXTREME CAUTION IN WORKING ON POWER SUPPLY AND OTHER ELECTRONIC COMPONENTS.
4. When disassembling or assembling a product, be sure to wear gloves to avoid injuries from metal parts with sharp edges.

WARNING

1. REPAIRS ON EPSON PRODUCT SHOULD BE PERFORMED ONLY BY AN EPSON CERTIFIED REPAIR TECHNICIAN.
2. MAKE CERTAIN THAT THE SOURCE VOLTAGES IS THE SAME AS THE RATED VOLTAGE, LISTED ON THE SERIAL NUMBER/RATING PLATE. IF THE EPSON PRODUCT HAS A PRIMARY AC RATING DIFFERENT FROM AVAILABLE POWER SOURCE, DO NOT CONNECT IT TO THE POWER SOURCE.
3. ALWAYS VERIFY THAT THE EPSON PRODUCT HAS BEEN DISCONNECTED FROM THE POWER SOURCE BEFORE REMOVING OR REPLACING PRINTED CIRCUIT BOARDS AND/OR INDIVIDUAL CHIPS.
4. IN ORDER TO PROTECT SENSITIVE MICROPROCESSORS AND CIRCUITRY, USE STATIC DISCHARGE EQUIPMENT, SUCH AS ANTI-STATIC WRIST STRAPS, WHEN ACCESSING INTERNAL COMPONENTS.
5. DO NOT REPLACE IMPERFECTLY FUNCTIONING COMPONENTS WITH COMPONENTS WHICH ARE NOT MANUFACTURED BY EPSON. IF SECOND SOURCE IF'S OR OTHER COMPONENTS WHICH HAVE NOT BEEN APPROVED ARE USED, THEY COULD CAUSE DAMAGE TO THE EPSON PRODUCT, OR COULD VOID THE WARRANTY OFFERED BY EPSON.

About This Manual

This manual describes basic functions, theory of electrical and mechanical operations, maintenance and repair procedures of the printer. The instructions and procedures included herein are intended for the experienced repair technicians, and attention should be given to the precautions on the preceding page.

Manual Configuration

This manual consists of six chapters and Appendix.

CHAPTER 1. PRODUCT DESCRIPTIONS
Provides a general overview and specifications of the product.

CHAPTER 2. OPERATING PRINCIPLES
Describes the theory of electrical and mechanical operations of the product.

CHAPTER 3. TROUBLESHOOTING
Describes the step-by-step procedures for the troubleshooting.

CHAPTER 4. DISASSEMBLY / ASSEMBLY
Describes the step-by-step procedures for disassembling and assembling the product.

CHAPTER 5. ADJUSTMENT
Provides Epson-approved methods for adjustment.

CHAPTER 6. MAINTENANCE
Provides preventive maintenance procedures and the lists of Epson-approved lubricants and adhesives required for servicing the product.

APPENDIX Provides the following additional information for reference:

- Connector pin assignments
- Electric circuit boards components layout
- Electrical circuit boards schematics
- Exploded diagram & Parts List

Symbols Used in this Manual

Various symbols are used throughout this manual either to provide additional information on a specific topic or to warn of possible danger present during a procedure or an action. Be aware of all symbols when they are used, and always read NOTE, CAUTION, or WARNING messages.

Indicates an operating or maintenance procedure, practice or condition that is necessary to keep the product's quality.

Indicates an operating or maintenance procedure, practice, or condition that, if not strictly observed, could result in damage to, or destruction of, equipment.

May indicate an operating or maintenance procedure, practice or condition that is necessary to accomplish a task efficiently. It may also provide additional information that is related to a specific subject, or comment on the results achieved through a previous action.

Indicates an operating or maintenance procedure, practice or condition that, if not strictly observed, could result in injury or loss of life.

Indicates that a particular task must be carried out according to a certain standard after disassembly and before re-assembly, otherwise the quality of the components in question may be adversely affected.

Revision Status

Revision	Date of Issue	Description
A	July 1, 2005	First release.
B	October 24, 2005	Revision-up: All pages are reviewed and revised.

Contents

Product Description

Overview 2
- Features 2

Basic specifications 6
- Printing 6
- Electrical specifications 11
- Safety approvals 11
- Reliability 12
- Operating environment conditions 12
- Paper specifications 13
- Printable area 20
- Interfaces 24

Operations 39
- Control panel 39
- Basic functions 44
- SelecType functions setting 46
- Special operations 50

Dimensions and weight 53

Operating Principles

Overview 56
- Part names 57

Printer mechanism 58
- Printhead 58
- Carrier drive mechanism 61
- Ribbon drive mechanism 63
- Paper feed mechanism 64
- Automatic Paper Thickness Control (APTC) mechanism 72
- Other mechanisms 75

Circuit operation 77
- ROM board 78
- OP board 89
- Power supply circuit 90

Troubleshooting

Overview 94
- Troubleshooting procedure 94
- Preliminary checks 95
- Power-on initialization sequence 96

Error and warning messages 101
- Fatal errors 103

Troubleshooting 104
- Test reference values 104
- Troubleshooting based on error codes 106
- Troubleshooting based on symptoms 112

Disassembly and Assembly

Overview 124
- Disassembly precautions 124
- Tools and instruments 125
- Abbreviations for small parts 126
- Service check after repair 127

Main components disassembly 129
- Major component replacement flowcharts 130
- Covers 132
- Electrical circuit board removal 136
- Printer mechanism 149

Adjustment

Adjustment overview 212
- Required adjustments 212
- Tools 214

Adjustment program 218
Hardware adjustment 220
CR drive belt (SP BELT) tension adjustment 220
LF drive belt tension adjustment 222
APTC UNIT mount position adjustment 224
Card guide mount position adjustment 227
Carriage parallelism adjustment 229
Nip bracket mount position adjustment 233
Software adjustment 235
TOF sensor sensitivity adjustment 235
APTC thickness detection adjustment 238
APTC detection position adjustment 241
Top margin adjustment 245
Left margin adjustment 247
Bottom margin adjustment 248
Bi-D adjustment 250
Additional functions 252

Maintenance

Overview 258
Preventive maintenance 258
Lubrication 258
Lubricants 258
Lubrication points 259

Appendix

System connection diagram 280
Electrical system connections 281
Connector summary 281
Wiring connection diagram 287
Electric Circuit Diagrams 289
Component Layout 317
Exploded diagrams 318
Parts list 324

CHAPTER

1

PRODUCT DESCRIPTION

1.1 Overview

1.1.1 Features

Columns: 136 columns at 10 cpi

Printing speed:

High speed draft	1550 cps at 10 cpi
Draft	1320 cps at 10 cpi
NLQ	330 cps at 10 cpi

Paper feeding method

Push Tractor feed (front, rear)

Push & Pull Tractor feed (front, rear)

Paper feeders

Front push Tractor

Rear push Tractor

Pull Tractor (Option)

Paper and media

Continuous paper, Multipart paper, Labels, Overlapping multipart forms, Continuous forms with labels

Fonts

2 Near-Letter Quality (NLQ) and 1 Draft bitmap typefaces

8 Barcode fonts

Character tables

Standard version	13 tables
NLSP version	42 tables

Input buffer 128 Kbytes

Acoustic noise 58 dB (A) (ISO 7779 pattern)

Reliability

MVBF	Mean print Volume Between Failures (except print head) = 1.3 billion lines (MTBF 25% duty cycle)
MTBF	20,000 POH
Print head life	200 million strokes/wire (approx. 400 million characters, Draft, 10 cpi, 14 dots/character)
Ribbon life	15 million characters (Draft 10 cpi, 14 dots/character)

Interface

Bi-directional parallel interface (IEEE-1284 nibble mode supported)

Serial I/F

USB (ver. 1.1) I/F

Type B I/F level 2 (Option)

Control codes ESC/P, IBM PPDS emulation

Multipart copy capability

Front paper path	1 original + 9 copies
Rear paper path	1 original + 6 copies

Control panel functions

Tractor Select (Front/Rear), Font, Pitch, Tear Off, Top of Form, LF/FF, Load, Micro Feed, Pause, Reset, and Menu

Optional Perforation Cutter

Auto paper thickness adjustment

Adjusts platen gap automatically. Manual adjustment also can be selected.

Auto paper change

Paper source change (Rear Tractor / Front Tractor) from software or the control panel.

Paper jam detection

Detects paper jams and indicates the error status.

1.1.1.1 External view and part names

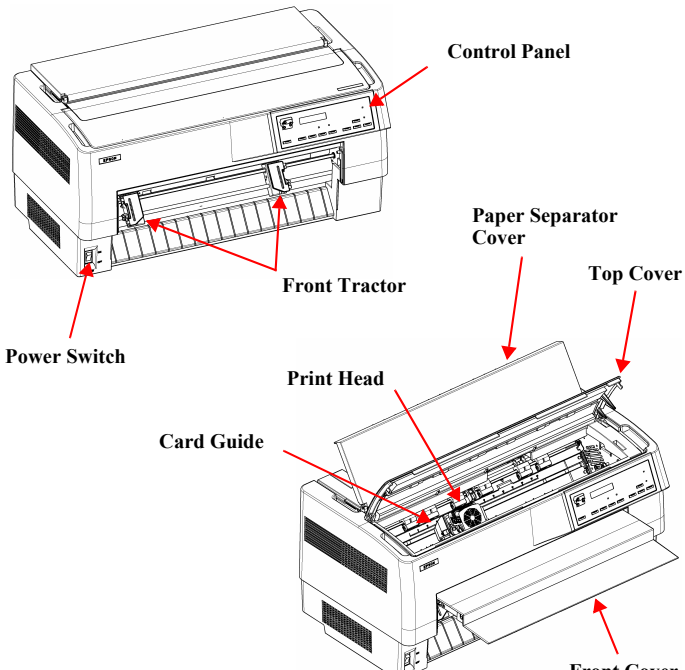

Figure 1-1. External View (Front)

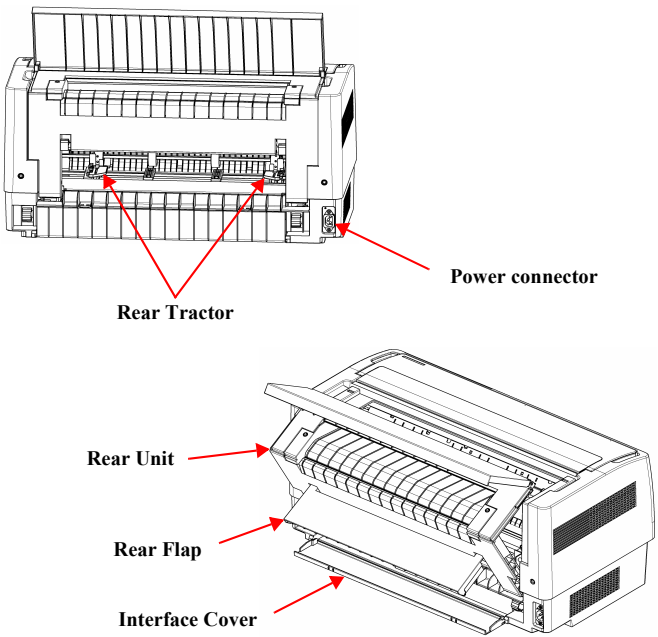

Figure 1-2. External view (rear)

1.1.1.2 Consumables and options

Table 1-1. DFX-9000 consumables and options

	Name	Epson Product Code
Consumables	Ribbon cartridge (black)	S015384
Options	Pull tractor unit	C12C800381
	Perforation cutter	C815071
	Serial I/F card	C823051
	32 KB intelligent serial I/F card	C823071
	Local Talk I/F card	C823121
	Coax I/F card	C823141
	Twinax I/F card	C823151
	EpsonNet 10/100 Base Tx internal print servers	C12C823912 C12C824341
	EpsonNet 802.11b/g wireless external print server	C12C824221

1.1.1.3 Model comparison

The following table describes the differences between the DFX-8500 and the DFX-9000.

Table 1-2. Overview comparison

Item	DFX-9000	DFX-8500
Print Speed	Hi Speed Draft: 1550 cps Draft: 1320 cps NLQ: 330 cps	HS-Draft: 1120 cps Draft: 840 cps NLQ: 210 cps
Copy Capability	1 + 9 copies (Front)	1 + 6 copies (Front)
Paper Handling	Front: Push Rear: Push Optional: Pull (Top)	Front: Push Rear: Push Optional: Pull (Top)
Supported Paper	Continuous forms	Continuous forms
Dimension W × D × H	700 × 378 × 363 mm 27.6 × 14.9 × 14.3 inches	700 × 382 × 369 mm 27.6 × 15.0 × 14.5 inches
Weight	34.0 kg (74.8 lbs)	29.0 kg (63.8 lbs)
Interface	Std.: IEEE 1284/Bi-D Serial (RS232C) USB 1.1 Optional Type-B slot × 1	Std.: IEEE 1284/Bi-D Serial (RS232C) Optional Type-B slot × 1
Buffer Memory	128 KB	128 KB
Reliability	MTBF: 20,000 POH	MTBF: 10,000 POH
Life, Printhead	400 million characters (200 million strokes/wire)	400 million characters
Life, Ribbon	15 million characters	15 million characters

Table 1-2. Overview comparison (continued)

Item	DFX-9000	DFX-8500
Noise Level	58 dB (A)	58 dB (A)
Control Code/ Emulation	ECS/P-9 IBM PPDS	ESC/P-9 IBM Pro Printer (2380/ 2381)
OS Supported Drivers	Win 9x/Me, NT4.0, 2000/ XP	Win 3.1, Win 9x/Me, NT3.51/4.0

1.2 Basic specifications

1.2.1 Printing

Print method	Impact dot matrix
Number of pins	36 pins
Print pin arrangement	9 × 4 staggered
Print pin diameter	0.29 mm (0.0114 inch)
Color	Black
Print direction	Bi-direction with logic seeking
Control code	ESC/P, IBM PPDS emulation

Resolution, Speed and Columns (see below)

Table 1-3. Print Resolution

Printing mode	Horizontal density	Vertical density	Adjacent dot print
High Speed Draft 10 cpi	90 dpi	72 dpi	No
High Speed Draft 12 cpi	96 dpi	72 dpi	No
Draft	120 dpi	72 dpi	No
Draft condensed	240 dpi	72 dpi	No
Draft emphasized	120 dpi	72 dpi	Yes
NLQ	240 dpi	144 dpi	No
Bit Image	60, 72, 80, 90 or 120 dpi	72 dpi	Yes
	120 or 240 dpi	72 dpi	No

Table 1-4. Print speed and printable columns

Printing mode	Character pitch (cpi)	Printable columns	Printing speed (cps)[1]		
			Normal mode[2]	Copy-1 mode[2]	Copy-2 mode[2]
High speed draft	10	136	1550	1280	1186
	12	163	1450	1200	1112
	15	204	1320	960	890
Hi-speed draft condensed	17	233	1155	840	778
	20	272	880	640	593
Draft	10	136	1320	960	890
	12	163	1320	960	890
	15	204	880	640	593
Draft condensed	17	233	660	480	445
	20	272	660	480	445
Draft emphasis	10	136	660	480	445
NLQ	10	136	330	240	222
	12	163	330	240	222
	15	204	220	160	148
	17	233	165	120	111
	20	272	165	120	111

Notes: 1. Print speed slows automatically under the following conditions:

- The cover is open
- Head temperature too hot
- Power supply overvoltage or undervoltage

2. Print mode: The SelecType Platen Gap (PG) setting affects print speed. As the platen gap increases, speed is slowed to allow the printhead to drive the pins with additional force. Print modes in the table above are defined as follows:
   - Normal mode: Platen Gap setting of 0 ~ 1
   - Copy-1 mode: Platen Gap setting of 2 ~ 6
   - Copy-2 mode: Platen Gap setting of 7 ~ 14

1.2.1.1 Paper feeding

Feeding method:

Push tractor feed, front and rear

Push & pull tractor feed with optional Pull Tractor, front or rear

Feeder:

Front push tractor

Rear push tractor

Pull tractor (option)

Paper path:

Front or rear in, top out

Line spacing:

4.23 mm (1/6 inch), or programmable in increments of 0.059 mm (1/432 inch)

Feed speed:

Normal mode	4.23 mm (1/6 inch) feed: 25 ms
	Continuous feed: 0.381 m/sec., 15.0 inches/sec.
Copy mode	4.23 mm (1/6 inch) feed: 25 ms
	Continuous feed: 0.279 m/sec., 11.0 inches/sec.

1.2.1.2 Input data buffer

128 Kbyte

1.2.1.3 Acoustic noise

Level: Approx. 58 dB (A) (ISO 7779 pattern)

1.2.1.4 Ribbon cartridge

Type:	Fabric
Color:	Black
Ribbon dimensions:	13 mm (W) × 70 m (L) Continuous
Ribbon life:	15 million characters (Draft 10cpi, 14 dots/character)
Dimensions:	570 mm (W) × 121 mm (D) × 40.3 mm (H)

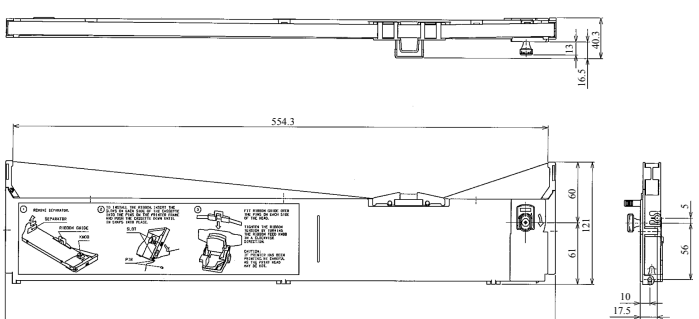

Figure 1-3. Ribbon Cartridge

1.2.1.5 Character tables

Basic character tables

See Table 1-5 for the details.

International and legal character sets

13 countries and legal

U.S.A., France, Germany, U.K., Denmark 1, Sweden, Italy, Spain 1, Japan, Norway, Denmark 2, Spain 2, Latin America

The international and legal characters are these 12 codes

23H, 24H, 40H, 5BH, 5CH, 5DH, 5EH, 60H, 7BH, 7CH, 7DH, 7EH.

Bar code

EAN-13, EAN-8, Interleaved 2 of 5, UPC-A, UPC-E, Code 39, Code 128, POSTNET, Coda bar (NW-7), Industrial 2 of 5, Matrix 2 of 5

Table 1-5. Character tables and typefaces

Version	Character table	Bitmap font
Standard version	Italic table PC437 (US Standard Europe) PC850 (Multilingual) PC860 (Portuguese) PC861 (Icelandic) PC863 (Canadian-French) PC865 (Nordic) Abicomp BRASCII Roman 8 ISO Latin 1 PC 858 ISO 8859-15	Epson High speed Draft (10 CPI, 12 CPI) Epson Draft (10 CPI, 12 CPI, Proportional) Epson Roman (10 CPI, 12 CPI, Proportional) Epson Sans Serif (10 CPI, 12 CPI, Proportional) Epson OCR-B (10 CPI)

Table 1-5. Character tables and typefaces (continued)

Version	Character table	Bitmap font
NLSP version	Italic table PC437 (US Standard Europe) PC850 (Multilingual) PC860 (Portuguese) PC861 (Icelandic) PC863 (Canadian-French) PC865 (Nordic) Abicomp BRASCII Roman 8 ISO Latin 1 PC 858 ISO 8859-15 PC437 Greek PC852 (East Europe) PC853 (Turkish) PC855 (Cyrillic) PC857 (Turkish) PC866 (Russian) PC869 (Greek) MAZOWIA (Poland) Code MJK (CSFR) ISO 8859-7 (Latin/Greek) ISO Latin 1T (Turkish)	Epson High speed Draft (10 CPI, 12 CPI) Epson Draft (10 CPI, 12 CPI, Proportional) Epson Roman (10 CPI, 12 CPI, Proportional) Epson Sans Serif (10 CPI, 12 CPI, Proportional) Epson OCR-B (10 CPI)

Table 1-5. Character tables and typefaces (continued)

Version	Character table	Bitmap font
NLSP version (Continued)	Bulgaria (Bulgarian) Estonia (Estonia) PC 774(LST 1283:1993) ISO 8859-2 PC 866 LAT. (Latvian) PC866UKR (Ukraine) PC771 (Lithuania) PC437 Slovenia PC MC PC1250 PC1251 Hebrew7* Hebrew8* PC862 (Hebrew)* PCAPTEC (Arabic) PC708 (Arabic) PC720 (Arabic) PCAR 864 (Arabic)	

Notes: 1. The ESC R command is effective on all character tables.

2. * These items are not displayed with the default setting mode.

1.2.1.6 Platen gap setting (SelecType)

The DFX-9000 platen gap is controlled by firmware, and is configured through SelecType. There are two platen-gap setting modes: Auto and Manual.

When set to Auto, the Automatic Paper Thickness Control (APTC) mechanism measures the paper thickness whenever you load paper. The distance between the head and platen is automatically adjusted for proper printing according to the thickness of the paper.

Manual mode can be used to fix some print quality problems, especially with multi-part and variable-thickness forms. The table below defines the manual SelecType platen gap settings by paper thickness. When using the Manual Platen Gap mode, the platen gap must be set to the proper position as shown below.

Table 1-6. Platen Gap Setting and Paper Thickness

SelecType setting	Paper thickness (inch)		Paper thickness (mm)	Platen gap (mm)
	Min.	Max.		
Auto	0.0028	0.0311	0.07 up to 0.79	0.39 to 1.09
0	-	0.0003	Under 0.08	0.39
1	0.0035	0.0051	0.09 up to 0.13	0.44
2	0.0055	0.0071	0.14 up to 0.18	0.49
3	0.0075	0.0091	0.19 up to 0.23	0.54
4	0.0094	0.0110	0.24 up to 0.28	0.59
5	0.0114	0.0130	0.29 up to 0.33	0.64
6	0.0134	0.0150	0.34 up to 0.38	0.69
7	0.0154	0.0169	0.39 up to 0.43	0.74
8	0.0173	0.0189	0.44 up to 0.48	0.79
9	0.0193	0.0209	0.49 up to 0.53	0.84
10	0.0213	0.0228	0.54 up to 0.58	0.89
11	0.0232	0.0248	0.59 up to 0.63	0.94
12	0.0252	0.0268	0.64 up to 0.68	0.99
13	0.0272	0.0287	0.69 up to 0.73	1.04
14	0.0291	0.0311	0.74 up to 0.79	1.09
15*	0.0378	0.0394	0.96 up to 1.00	1.31

* This setting is for customization only.

1.2.2 Electrical specifications

The DFX-9000 has an auto-switching, universal power supply with the following specifications:

Rated voltage range:	AC 100 to 240 V
Input voltage range:	AC 90 to 264 V
Rated frequency:	50 to 60 Hz
Input frequency:	49.5 to 60.5 Hz
Rated current:	4.8 A (max. 14.5 A)
Power consumption:	Approx. 185 W (ISO/IEC10561 Letter pattern) Approx. 9.5 W in sleep mode* 0 W in powered off mode Energy Star Compliant
Dielectric strength:	AC 1500 Vrms. 1 sec. (between AC line and chassis)

The printer enters sleep mode after 5 minutes of inactivity if both of the following are true:

- The printer is not in an error condition.
- There is no data in the input buffer.

1.2.3 Safety approvals

Safety standards:	UL60950
	CSA C22.2 No.60950
	EN60950 (Low Voltage Directive 73/23/EEC)
EMI:	FCC part15 subpart B class B
	CAN/CSA CEI/IEC CISPR 22 class B
	EMC Directive 89/336/EEC
	EN55022 class B
	EN61000-3-2
	EN61000-3-3
	EN55024
	AS/NZS CISPR22 class B

1.2.4 Reliability

Mean print volume between failure:	133 million lines (except print head)
MTBF:	20,000 Power-on hours
Print head life:	200 million strokes/wire
Ribbon life:	15 million characters (Draft 10 cpi, 14 dots/ character)

1.2.5 Operating environment conditions

Operating

Temperature	5 to 35 °C
	15 to 25 °C when printing labels, continuous forms with labels, and overlapping continuous forms
Humidity	10 to 80% RH, non-condensing
	30 to 60% RH, non-condensing, when printing labels, continuous forms with labels, and overlapping continuous forms
Shock Resistance	1 G, within 1 ms
Vibration Resistance	0.25 G, 10 to 55 Hz

Non-operating

Temperature:	-30 to 60 °C
Humidity	0 to 85% RH, non-condensing
Shock Resistance	2 G, within 2 ms
Vibration Resistance	0.5 G, 10 to 55 Hz

1.2.6 Paper specifications

1.2.6.1 Continuous paper (single sheet)

Table 1-7. Continuous form, single sheet paper specifications, front or rear paper path

Item		Tractor		Tractor + Cutter	
		Min.	Max.	Min.	Max.
Width	mm	76.2	419.1	101.6	406.4
	inch	3	16.5	4	16
Length (one page)	mm	76.2	558.8	101.6	431.8
	inch	3	22	4	17
Total thickness	mm	0.065	0.1	0.065	0.1
	inch	0.0025	0.0039	0.0025	0.0039
Weight (single sheet)	g/m^2	52	82	52	82
	lb	14	22	14	22

Notes: 1. Punch-hole diameter should be less than 5 mm.

2. When using pre-printed paper, the reflectivity of the pre-printed color should be less than 60% (e.g., black). The shaded area should not be pre-printed as shown in Figure 1-9. Pre-printed paper (continuous Forms) (p.16), and that area should not have punch holes.

Quality

Plain or recycled paper

Not curled, folded, nor crumpled

Fastening

Point glue or paper staple (both sides)

1.2.6.2 Continuous paper (multipart)

Table 1-8. Multipart paper specifications, rear paper path

Item		Tractor only		Tractor and Cutter	
		Min.	Max.	Min.	Max.
Width	mm	76.2	419.1	101.6	406.4
	inch	3	16.5	4	16
Length (one page)	mm	76.2	558.8	101.6	431.8
	inch	3	22	4	17
Copies		1 original + 6 copies		1 original + 6 copies	
Total thickness	mm	0.12	0.53	0.12	0.53
	inch	0.0047	0.021	0.0047	0.021
Weight (one sheet of multipart form)	g/m^2	41	56	41	56
	lb	11	15	11	15

Table 1-9. Multipart paper specifications, front paper path

Item		Tractor only		Tractor and Cutter	
		Min.	Max.	Min.	Max.
Width	mm	76.2	419.1	101.6	406.4
	inch	3	16.5	4	16
Length (one page)	mm	76.2	558.8	101.6	431.8
	inch	3	22	4	17
Copies		1 original + 9 copies		1 original + 6 copies	
Total thickness	mm	0.12	0.79	0.12	0.53
	inch	0.0047	0.031	0.0047	0.021
Weight (one sheet of multipart form)	g/m^2	41	56	41	56
	lb	11	15	11	15

Notes: 1. Multipart forms should be Carbonless (NCR) or Carbon-backed. Don't use Carbon-interleaved forms.

2. Punch-hole diameter should be less than 5 mm.

3. When using pre-printed paper, the reflectivity of the pre-printed color should be less than 60% (e.g., black). The shaded area should not be pre-printed as shown in Figure 1-9 on page 16, and that area should not have punch holes.

Quality

Carbonless (NCR) or Carbon-backed multipart paper

Not curled, folded, nor crumpled

Fastening

Point glue or paper staple (both sides)

Recommended Maximum Weight for Individual Sheets in Multipart Forms

To use the table below, find the column that represents the total number of sheets in your multipart form. The rows in the column indicate the maximum weight for each sheet in the form, in grams per square meter (g/m^2).

Table 1-10. Maximum weight per sheet, multipart forms

	1P	2P	3P	4P	5P	6P	7P	8P	9P	10P
1st sheet	45 to 70	50	50	43	43	43	43	43	43	43
2nd sheet	-	43	34	34	34	34	34	34	34	34
3rd sheet	-	-	43	34	34	34	34	34	34	34
4th sheet	-	-	-	43	34	34	34	34	34	34
5th sheet	-	-	-	-	43	34	34	34	34	34
6th sheet	-	-	-	-	-	43	34	34	34	34
7th sheet	-	-	-	-	-	-	43	34	34	34
8th sheet	-	-	-	-	-	-	-	43	34	34
9th sheet	-	-	-	-	-	-	-	-	43	34
10th sheet	-	-	-	-	-	-	-	-	-	43

Approved joining of multipart form sheets

CAUTION

Don't use continuous multipart forms that are joined with metal staples, one sided crimping, tape-staples, or bar-gluing.

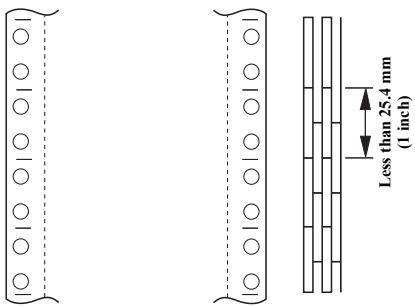

Figure 1-4. Spot gluing on both sides

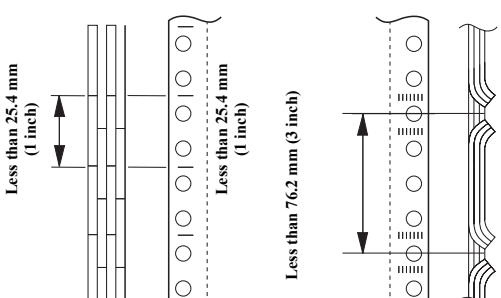

The thickness of the crimped part when extended should be less than 0.9 mm.

Figure 1-5. Combination spot gluing and crimping

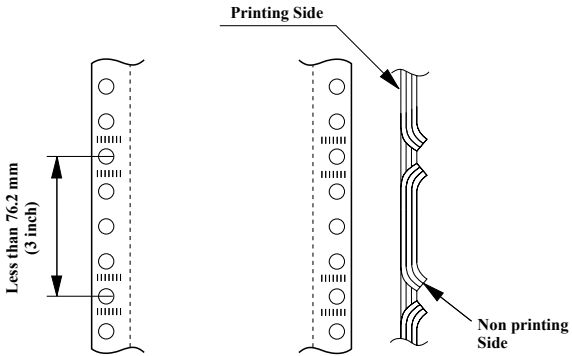

The thickness of the crimped part when extended should be less than 0.9 mm.
The any crimp deformation of the paper surface must be on the bottom, and not the printing surface.

Figure 1-6. Crimping both sides

The thickness of the perforation part

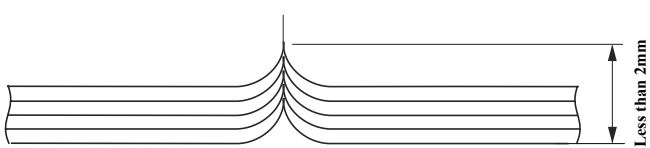

The thickness of the tenting at the perforation fold should be 2 mm or less.

Figure 1-7. The thickness of the perforation area

Perforations cuts

The ratio of the cut/uncut length of the perforation should be between 2:1 and 5:1.

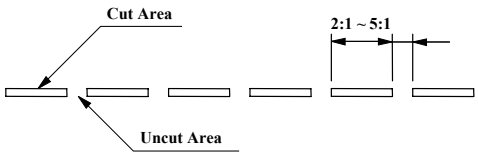

The space between horizontal perforation cuts and paper edge should be more than 1 mm.

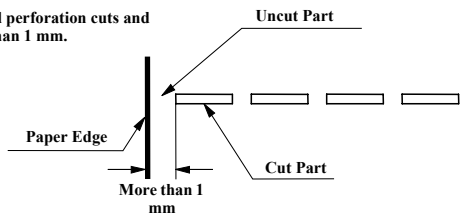

If a vertical line and horizontal line are crossed at the cut parts (a), the area shown in the figure below will be the unprintable area. If crossed at the uncut parts (b), the printable area will not be limited.

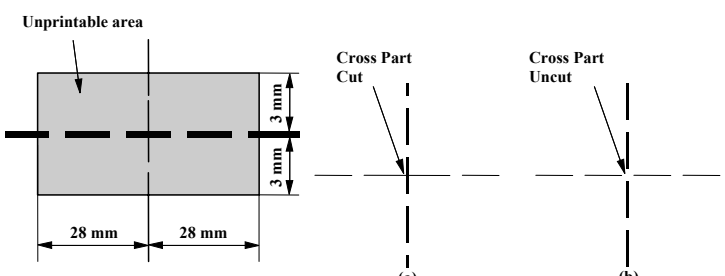

Figure 1-8. Perforations cuts

Pre-printed paper (continuous forms)

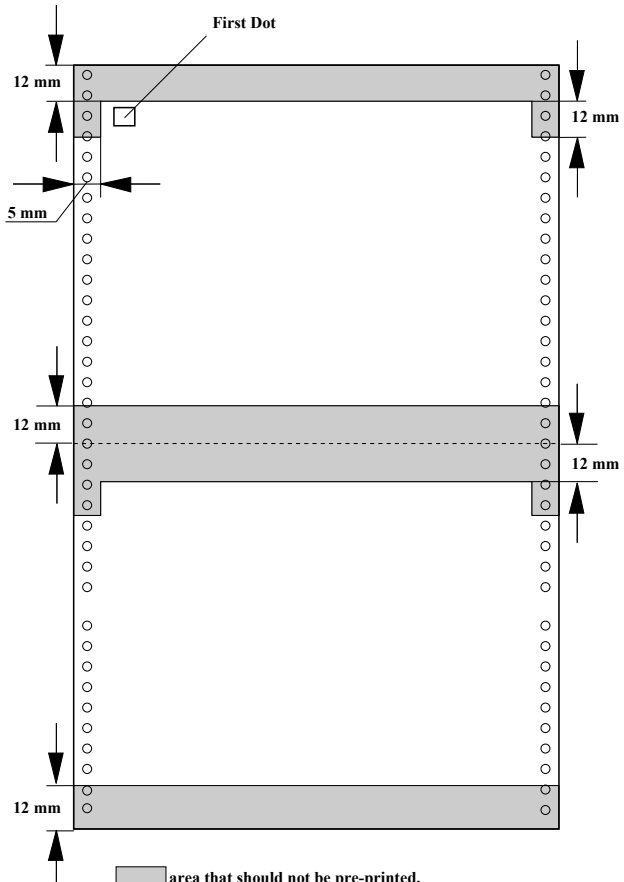

Figure 1-9. Pre-printed paper (continuous Forms)

1.2.6.3 Labels

Labels and labeled forms must be plain paper or equivalent quality.

Table 1-11. Label specifications, front or rear paper path

Item		Min.	Max.
Label size		Refer to Figures 1-10 and 1-11	
Base sheet width	mm	76.2	419.1
	inch	3	16.5
Base sheet length (one page)	mm	76.2	558.8
	inch	3	22
Base sheet thickness	mm	0.07	0.09
	inch	0.0028	0.0035
Total thickness	mm	0.16	0.19
	inch	0.0063	0.0075
Label weight	g/m^2	64	
	lb	17	

Notes:
1. Printing on labels must only be done under normal temperature and humidity conditions.
2. The base sheet must be continuous paper.
3. Do not reverse-feed or pull label sheets backward through the printer.
4. Eject the label sheets before you turn off the printer.
5. Don't print on the base sheet.
6. It is recommended that you use labels with base sheets entirely covered with label material.
7. When printing on labels with base sheets not completely covered with label material, make sure the paper thickness (platen gap) is measured on the label, or use the appropriate manual setting.
8. Do not print labels when the Perforation Cutter is installed.

Labels and base sheet type

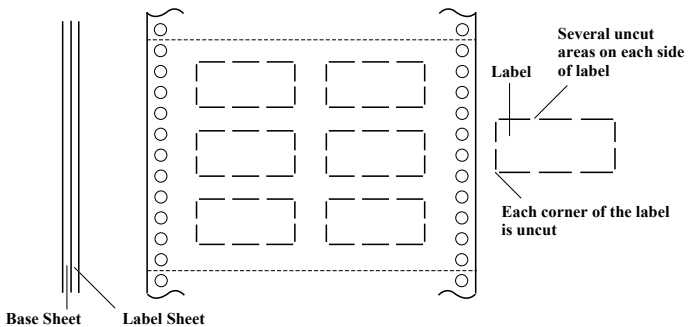

Figure 1-10. Base sheets entirely covered with label material

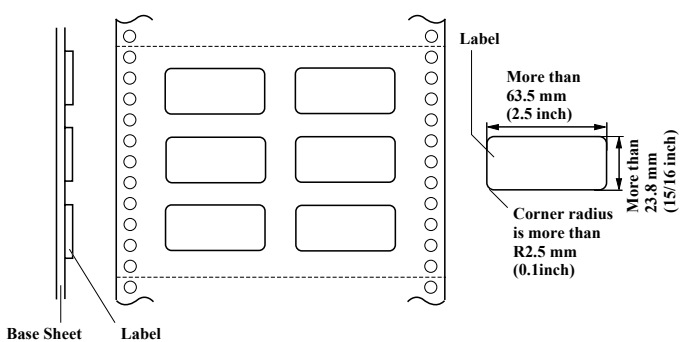

Figure 1-11. Base sheets not covered with label material

1.2.6.4 Continuous forms with labels

Table 1-12.

Item		Rear paper path		Front paper path	
		Min.	Max.	Min.	Max.
Base sheet width	mm	76.2	419.1	76.2	419.1
	inch	3	16.5	3	16.5
Base sheet length	mm	76.2	558.8	76.2	558.8
	inch	3	22	3	22
Total thickness	mm	0.065	0.53	0.065	0.79
	inch	0.0025	0.021	0.0025	0.031

Notes: 1. Print continuous forms with labels only under normal temperature and humidity conditions.

2. Do not print continuous forms with labels when the perforation cutter is installed.

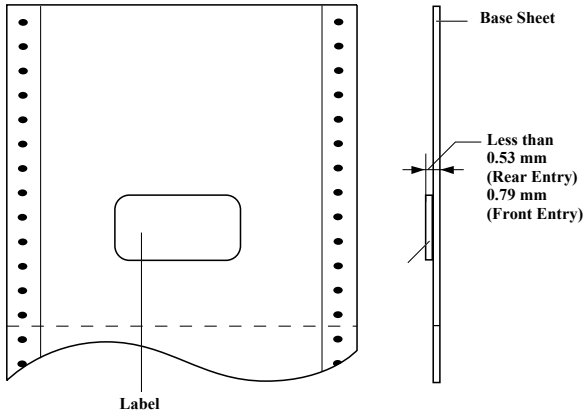

Figure 1-12. Continuous forms with labels

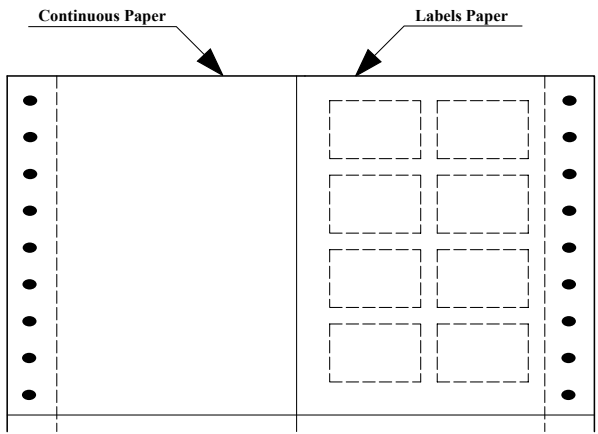

Figure 1-13. A sheet composed of continuous paper and labels paper

1.2.6.5 Overlapping multipart forms

Table 1-13. Overlapping multipart forms specifications

Item		Rear paper path		Front paper path	
		Min.	Max.	Min.	Max.
Base sheet width	mm	76.2	419.1	76.2	419.1
	inch	3	16.5	3	16.5
Base sheet length	mm	76.2	558.8	76.2	558.8
	inch	3	22	3	22
Total thickness	mm	0.13	0.53	0.13	0.79
	inch	0.0051	0.021	0.0051	0.031

Notes: 1. Print on overlapping multipart forms only under normal temperature and humidity conditions.

2. Do not print on base sheets.
3. Do not feed paper in reverse direction.
4. Do not print overlapping multipart forms when the perforation cutter is installed.

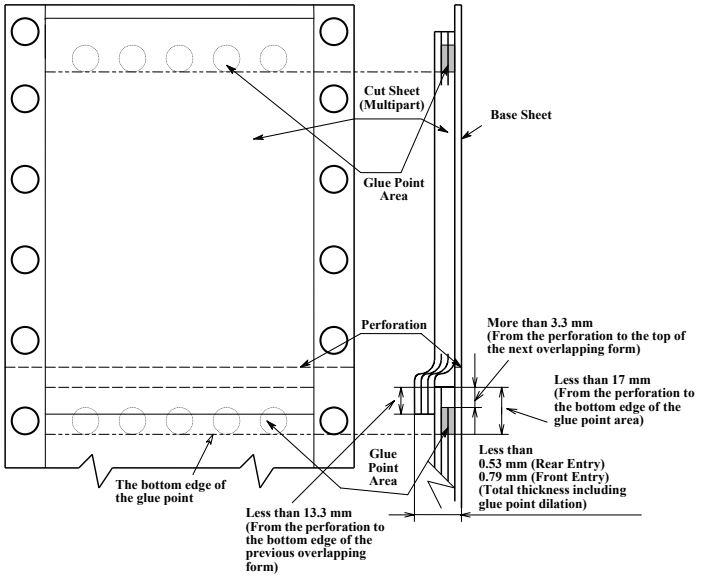

Figure 1-14. Overlapping multipart forms

1.2.7 Printable area

1.2.7.1 Continuous paper

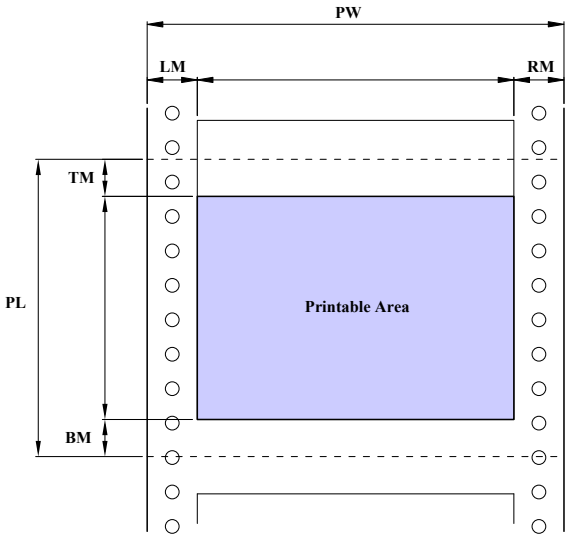

Figure 1-15. Printable area for continuous paper

Table 1-14. Printable area for continuous paper

Item	Continuous paper
PW (width)	Refer to sections 1.2.6.1 Continuous paper (single sheet) (p.13) and 1.2.6.2 Continuous paper (multipart) (p.13).
PL (length)	
LM (left margin)	■ 13 mm or more (when the paper width is at least 127 mm / 5 inches) ■ 10 mm or more when using the Pull Tractor
RM (right margin)	13 mm or more
TM (top margin)	4.2 mm or more
BM (bottom margin)	4.2 mm or more

1.2.7.2 Labels

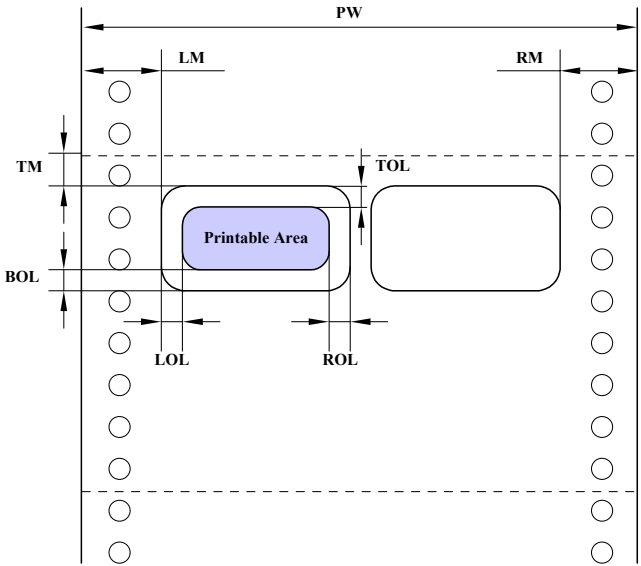

Figure 1-16. Printable area for labels

Table 1-15. Printable area for continuous labels

Parameter	Specifications
PW (width)	Refer to 1.2.6.3 Labels (p.17).
PL (length)	
LM (left margin)	■ 13 mm or more when the paper width is 127 mm / 5 inches ■ 10 mm or more when using the Pull Tractor
RM (right margin)	13 mm or more
TM (top margin)	2.2 mm or more
LOL (left margin on label)	3 mm or more
ROL (right margin on label)	3 mm or more
TOL (top margin on label)	2 mm or more
BOL (bottom margin on label)	2 mm or more

1.2.7.3 Continuous forms with labels

Printable area is on both of base sheet and label as follows.

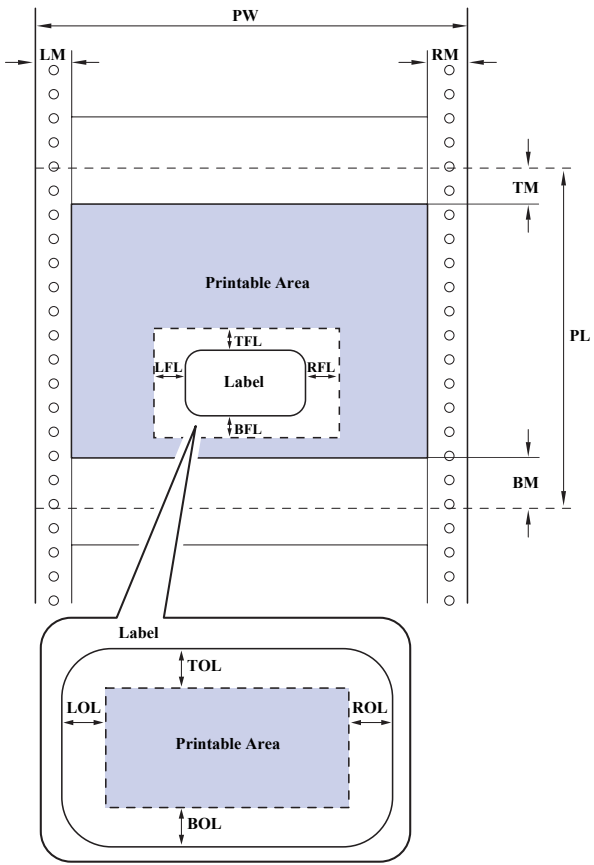

Figure 1-17. Printable area for continuous forms with labels

Table 1-16. Printable area specification for continuous labels

Parameter	Specification
PW (width)	Refer to 1.2.6.4 Continuous forms with labels (p.18).
PL (length)	
LM (left margin)	■ 13 mm or more when the paper width is 127 mm / 5 inches ■ 10 mm or more when using the Pull Tractor
RM (right margin)	13 mm or more
TM (top margin)	4.2 mm or more
BM (bottom margin)	4.2 mm or more
LFL (left margin from label)	30.9 mm or more
RFL (right margin from label)	30.9 mm or more
TFL (top margin from label)	20.2 mm or more
BFL (bottom margin from label)	16.6 mm or more
LOL (left margin on label)	3 mm or more
ROL (right margin on label)	3 mm or more
TOL (top margin on label)	2 mm or more
BOL (bottom margin on label)	2 mm or more

1.2.7.4 Overlapping multipart forms

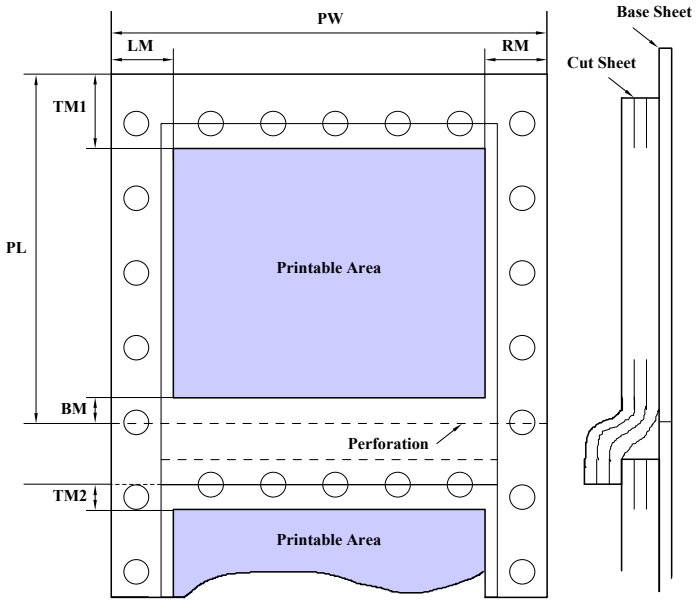

Figure 1-18. Printable area for overlapping multipart forms

Table 1-17. Printable area for overlapping multipart forms

Item	Labels paper
PW (width)	Refer to 1.2.6.5 Overlapping multipart forms (p.19)
PL (length)	
LM (left margin)	16 mm or more
RM (right margin)	16 mm or more
TM1 (top margin)	26.3 mm or more
TM2 (top margin)	26.3 mm or more (starting on page 2)
BM (Bottom margin)	16.6 mm or more

1.2.8 Interfaces

This printer provides 4 interfaces as standard: bi-directional 8-bit parallel, serial, USB, and a Type-B optional interface slot.

1.2.8.1 Parallel interface (forward channel)

Transmission mode: 8 bit parallel, IEEE-1284 compatibility mode

Adaptable connector: 57-30360 (Amphenol) or equivalent

Synchronization: -STROBE pulse

Handshaking: BUSY and -ACKNLG signals

Signal level: TTL compatible (IEEE-1284 level 1 device)

Table 1-18. Parameters

Parameter	Minimum	Maximum	Condition
V_{OH}*	-	5.5 V	-
V_{OL}*	-0.5 V	-	-
I_{OH}*	-	0.32 mA	V_{OH} = 2.4 V
I_{OL}*	-	12 mA	V_{OL} = 0.4 V
C_O	-	50 pF	-
V_{IH}	-	2.0 V	-
V_{IL}	0.8 V	-	-
I_{IH}	-	0.32 mA	V_{OL} = 0.4 V
I_{IL}	-	12 mA	V_{IL} = 0.8 V
C_I	-	50 pF	-

* Active-High signals are 2.0 V or lower when the printer is off and 3.0 V or higher when the printer is on. The receiver has an impedance equivalent to 7.5 kΩ.

Data transmission timing

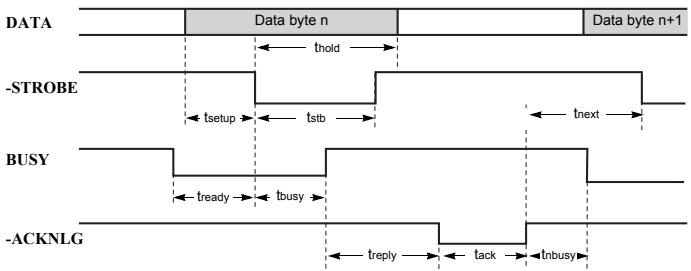

Figure 1-19. Data transmission timing

Table 1-19. Parameters

Parameter	Minimum	Maximum
t_{setup}	500 nsec	-
t_{hold}	500 nsec	-
t_{stb}	500 nsec	-
t_{ready}	0	-
t_{busy}	-	500 nsec
t_{reply}	-	-
t_{ack}	500 nsec	10 µs
t_{nbusy}	0	-
t_{next}	0	-
t_{tout}[1]	-	120 nsec
t_{tin}[2]	-	200 nsec

Notes: 1. Rise and fall time of output signals
2. Rise and fall time of input signals

The BUSY signal is active (high) under the following conditions:

- When receiving data
- When the input buffer is full
- When the -INIT signal is active (low)
- During hardware initialization
- When the -ERROR or PE signal is active (active-low and active-high, respectively)
- In self test mode
- In adjustment mode
- In default-setting mode

The -ERROR signal is active (low) under the following conditions:

- When there is a printer hardware error (fatal error)
- When there is a paper-out error
- When there is a cover open error
- When there is a paper jam error
- When there is a ribbon out error
- When there is an incomplete paper change error

The PE signal is active (high) when there is a paper-out error

Table 1-20. Connector pin assignment, forward channel

Pin No.	Signal name	Return GND Pin	In/Out*	Function description
1	-STROBE	19	In	This signal is a strobe pulse. Input data is latched at the falling edge of this signal.
2	DATA1	20	In	Parallel input data to the printer bit 0: LSB
3	DATA2	21	In	bit 1
4	DATA3	22	In	bit 2
5	DATA4	23	In	bit 3
6	DATA5	24	In	bit 4
7	DATA6	25	In	bit 5
8	DATA7	26	In	bit 6
9	DATA8	27	In	bit 7: MSB
10	-ACKNLG	28	Out	This signal (negative pulse) indicates that the printer has received data and is ready to accept more.

Table 1-20. Connector pin assignment, forward channel (continued)

Pin No.	Signal name	Return GND Pin	In/Out*	Function description
11	BUSY	29	Out	This signal, when high, means that the printer is not ready to accept data.
12	PE	28	Out	This signal, when high, means that the printer has a paper-out error.
13	SLCT	28	Out	Always high (active) when the printer is powered on.
14	-AFXT	30	In	Not used.
31	-INIT	30	In	This signal's negative pulse initializes the printer.
32	-ERROR	29	Out	This signal is low when the printer has error.
36	-SLIN	30	In	Not used.
18	Logic H	-	Out	This line is pulled up to +5 V through a 3.9 kΩ resistor.
35	+5 V	-	Out	This line is pulled up to +5 V through a 1.0 kΩ resistor.
17	Chassis	-	-	Chassis GND
16, 33 19-30	GND	-	-	Signal GND
15, 34	NC	-	-	Not connected.

* In/Out denotes the signal flow direction from the printer.

1.2.8.2 Parallel interface (reverse channel)

Transmission mode: IEEE-1284 nibble mode

Compatible connector: 57-30360 (Amphenol) or equivalent

Synchronization: Refer to the IEEE-1284 specification

Handshaking: Refer to the IEEE-1284 specification

Signal level: TTL compatible (IEEE-1284 level 1 device)

Data transmission timing: Refer to the IEEE-1284 specification

Extensibility request:

The printer responds to the extensibility request in the affirmative when the request is 00h or 04h:

- 00h: Request nibble mode of reverse channel transfer
- 04h: Request device ID in nibble mode of reverse channel transfer

Device ID:

The printer sends the following device ID strings when it is requested.

When IEEE 1284.4 is enabled,

[00h][50h]
MFG:EPSON;
CMD:ESCP9,PRPII9,BDC,D4;
MDL:DFX-9000;
CLS:PRINTER;
DES:EPSON[SP]DFX-9000;

When IEEE 1284.4 is disabled,

[00h][4Dh]
MFG:EPSON;
CMD:ESCP9,PRPII9,BDC;
MDL:DFX-9000;
CLS:PRINTER;
DES:EPSON[SP]DFX-9000;

Table 1-21. Connector pin assignment, reverse channel

Pin No.	Signal name	Return GND Pin	In/Out*	Function description	
1	HostClk	19	In	Host clock signal	
2	DATA1	20	In	Parallel input data to the printer	bit 0: LSB
3	DATA2	21	In		bit 1
4	DATA3	22	In		bit 2

Table 1-21. Connector pin assignment, reverse channel (continued)

Pin No.	Signal name	Return GND Pin	In/Out*	Function description
5	DATA4	23	In	bit 3
6	DATA5	24	In	bit 4
7	DATA6	25	In	bit 5
8	DATA7	26	In	bit 6
9	DATA8	27	In	bit 7: MSB
10	PtrClk	28	Out	Printer clock signal
11	PtrBusy / DataBit-3, 7	29	Out	Printer busy signal and reverse channel transfer data bit 3 or 7.
12	AckDataReq / DataBit-2, 6	28	Out	Acknowledge data request signal and reverse channel transfer data bit 2 or 6.
13	Xflag / DataBit-1, 5	28	Out	X-flag signal and reverse channel transfer data bit 1 or 5.
14	HostBusy	30	In	Host busy signal
31	-INIT	30	In	Not used.
32	-DataAvail / DataBit-0, 4	29	Out	Data available signal and reverse channel transfer data bit 0 or 4.
36	1284-Active	30	In	1284 active signal
18	Logic-H	-	Out	This line is pulled up to +5 V through a 3.9 kΩ resistor.
35	+5 V	-	Out	This line is pulled up to +5 V through a 1.0 kΩ resistor.
17	Chassis	-	-	Chassis GND
16, 33 19-30	GND	-	-	Signal GND
15, 34	NC	-	-	Not connected.

* In/Out refers to the direction of signal flow from the printer side.

1.2.8.3 Serial interface

Synchronization: Asynchronous

Signal level: EIA-232D

MARK logical 1: –3 V to –25 V

SPACE logical 0: +3 V to +25 V

Word length:

Start bit: 1 bit

Data bit: 8 bit, 7 bit

Parity bit: Odd, Even, None, Ignore

Stop bit: 1 bit or more

Baud rate: 300, 600, 1200, 2400, 4800, 9600 or 19200 BPS

Handshaking: DTR signal and XON/XOFF
DTR = MARK, XOFF: indicates that the printer cannot receive data.
DTR = SPACE, XON: indicates that the printer is ready to receive data.

NOTE: *The DTR signal is MARK, and the XOFF code (DC3, 13h) is transmitted when the remaining space in the input buffer is 256 bytes. The DTR signal is SPACE, and the XON code (DC1, 11h) is transmitted as soon as the available space in the input buffer exceeds 256 bytes.*

Error handling: Only parity errors are detected. Overrun and framing errors are ignored.

Connector: 25-pin subminiature D-shell connector (female)

Table 1-22. Connector pin assignment

Pin No.	Signal name	In/ Out*	Function description
2	TXD	Out	Transmits data.
20	DTR	Out	Indicates whether the printer is ready to receive data or not.
11	REV	Out	Connected directly to the DTR signal.
4	RTS	Out	Requests to send. Always SPACE level when the printer is powered on. Pulled up to +12 V via 4.7 kΩ resistor.
3	RXD	In	Receives data.
7	Signal GND	-	Signal GND.
1	Chassis GND	-	Chassis GND.
Other	NC	-	Not used. Not connected.

* In/Out refers to the signal flow direction from the printer's point of view.

1.2.8.4 USB Interface

Specifications

Universal Serial Bus Specifications Revision 1.1

Universal Serial Bus Device Class Definition for Printing Devices Version 1.1

Bit rate: 12 Mbps (Full Speed Device)

Data encording: NRZI

Connector: USB Series B

Max. cable length: 2 meters

Connector pin assignment and signals:

Table 1-23. Connector pin assignment

Pin No.	Signal name	In/Out	Function description
1	VCC	-	This line is for cable power. Maximum power consumption is 100 mA.
2	–Data	Bi-directional	This line is for data.
3	+Data	Bi-directional	This line is for data and is pulled up to +3.3 V via a 1.5 kΩ resistor.
4	Ground	-	This line is for cable ground.

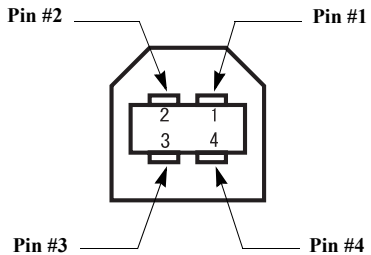

Figure 1-20. USB interface connector pin assignment

The USB responds to a BULK OUT transaction with a NAK handshake and other transactions with ACK under the following conditions:

- In SelecType mode
- During a cover open error
- During a paper jam error
- During a ribbon jam error
- During a ribbon out error
- During a paper-out error
- During an incomplete paper change error

The USB responds to a BULK OUT transaction with NAK and BULK IN transaction with NAK under the following conditions:

- When the input buffer is full
- During hardware initialization
- In the self test mode
- In the adjustment mode

When there is a printer hardware error (fatal error), the USB responds to a BULK OUT or BULK IN transaction with STALL.

1.2.8.5 USB device requests

GET PORT STATUS

The reply specification for GET PORT STATUS is shown below:

Table 1-24. GET PORT STATUS reply specification

Bit	Field	Field
7, 6	Reserved	Reserved
5	Paper Empty	0: Paper Not Empty 1: Paper Empty
4	Select	0: Not Selected 1: Selected
3	Not Error	0: Error 1: No Error
2, 1, 0	Reserved	Reserved

GET DEVICE ID

The printer sends the following device ID strings when requested.

When IEEE 1284.4 is enabled,

[00h][50h]
MFG:EPSON;
CMD:ESCP9,PRPII9,BDC,D4;
MDL:DFX-9000;
CLS:PRINTER;
DES:EPSON[SP]DFX-9000;

When IEEE 1284.4 is disabled,

[00h][4Dh]
MFG:EPSON;
CMD:ESCP9,PRPII9,BDC;
MDL:DFX-9000;
CLS:PRINTER;
DES:EPSON[SP]DFX-9000;

SOFT RESET

This USB Device Request is used when the Host initializes the printer's input buffer.

1.2.8.6 Optional interfaces

Type-B optional interface cards are available, including Type-B I/F Level 1 & Level 2 cards, and a simplified serial I/F Card. The main and optional commands supported by each are shown in the tables below:

Table 1-25. Reply for Type-B I/F Level 2 main command

Main command number	Command name	Transmission timing
01h	Start Software Reset	■ Init signal on the std. Parallel ■ Type B I/F Option command: 01h ■ Panel Reset ■ Cold start
02h	Send Option Type	Determines the level of Type-B I/F after powered on
04h	Send Name Data	Type B I/F Option command: 05h
07h	Inquire Software Emulation Type	Changing control language
0Eh	Inquire ASCII Message	Writing to DBIN-register
14h	Inquire Emergency Reply	Reply for background job command response
15h	Send Emergency Message	Receive background job command
16h	Inquire Network Settings	Request to send Network Settings OPCMD
18h	Start Shutdown	Request to execute Shutdown of the Type-B I/F Card

Table 1-26. Reply for Type-B I/F Level 2 optional command

Option command (OPCMD) number	Command name	Reply-A	Count 1 & 2	Count 1 & 2	Reply-B
00h	No-operation	-	-	-	-
01h	Start Hardware Reset	Accept	0000h	-	Execute OK
02h	Start Software Reset	Reject	-	-	-
03h	Start Software Reset	Accept	(See 1, Table 1-27)	(See 1, Table 1-27)	Execute OK
04h	Start Software Reset	Reject	-	-	-
05h	Inquire Name Data	Accept	-	-	Execute OK
06h	Send Product Name	Accept	(See 2, Table 1-27)	(See 2, Table 1-27)	Execute OK
07h	Send Software Emulation Type	Accept	(See 3, Table 1-27)	(See 3, Table 1-27)	Execute OK
08h	Complete Buffered Data	Accept	-	-	Execute OK
09h	Stop Procedure	Reject	-	-	-
0Ah	Return Buffered Data	Reject	-	-	-
0Bh	Send Entity Type	Accept	(See 4, Table 1-27)	(See 4, Table 1-27)	Execute OK
0Ch	Send Status	Accept	(See Table 1-28)	(See Table 1-28)	Execute OK
0Dh	Quit Procedure	Reject	-	-	-
0Eh	Inquire ASCII Message	Reject	-	-	-
0Fh	Send ASCII Message	Accept	0004	(*6)	Execute OK
10h	(Reserved)	Unknown	-	-	-
11h	Send All Entity Type	Reject	-	-	-
12h	Inquire Protocol	Reject	-	-	-

Table 1-26. Reply for Type-B I/F Level 2 optional command (continued)

Option command (OPCMD) number	Command name	Reply-A	Count 1 & 2	Count 1 & 2	Reply-B
13h	(Reserved)	Unknown	-	-	-
14h	Inquire Emergency Message	Accept	0000h	-	Execute OK
15h	Send Emergency Reply	Accept	(*7)	(*7)	Execute OK
16h	(Reserved)	Unknown	-	-	-
17h	Send Network Settings	Accept	0000h	-	Execute OK
18h-1Fh	(Reserved)	(N/A)	-	-	-

The reply for major Optional Commands (OPCMD) 03h, 06h, 07h, and 0Bh are shown below ("Wxxxxxxx" is the firmware version.)

Table 1-27. Major optional command (OPCMD) replies, Level 2 Type-B interface

OPCMD		Reply Message	
		ESC/P	IBM PPDS
1 (03h)	Main-Type	MT9p,PW136cl10cpi,PRG(Wxxxxxxx)rev,AP500ma	MT9p,PW136cl10cpi,PRG(Wxxxxxxx)rev,AP500ma
2 (06h)	Product-Name	DFX-9000	DFX-9000
3 (07h)	Emulation-Type	ESCP9,PRPII9,BDC	ESCP9,PRPII9,BDC
4 (0Bh)	Entity-Type	EPSONFX	EPSONPRPII9

Reply for OPCMD 0Ch (Send Status) is shown below. Count 1 & 2 and Message are different depending on the printer status.

Table 1-28. OPCMD send status (06h) replies, Level 2 Type-B interface

Status	Main State	Status:<SP>State:<SP>Reason		MNSTS						
		State	Reason	EE	FE	CO	IE	PJ	PE	OF
Fatal Error	Fatal Error	Printer Error	Fatal<SP>Error	0	1	0	0	0	0	1
Not selected	Port is not Selected	Printer Error	Port<SP>is<SP>not<SP>selected	0	0	0	0	0	0	1
Cover Open Error	Cover Open Error	Printer Error	Cover<SP>Open	0	0	1	0	0	0	1
TBD	Lever Operation Error	Printer Error	Operation<SP>Error	1	0	0	0	0	0	1
Paper Jam Error	Paper Jam Error	Printer Error	Paper<SP>Jam	0	0	0	0	1	0	1
Ribbon Jam Error	Expanded Error	Printer Error	Expanded<SP>Error	1	0	0	0	0	0	1
Ink or Ribbon End Error	Expanded Error	Printer Error	Expanded<SP>Error	1	0	0	0	0	0	1
Paper Out Error	Paper Out Error	Printer Error	Paper<SP>Out	0	0	0	0	0	1	1
Setting Mode	Setting Mode	Printer Error	SelecType	0	0	0	0	0	0	1
Expanded Error	Expanded Error	Printer Error	Expanded<SP>Error	1	0	0	0	0	0	1
Incomplete changing paper Error	Expanded Error	Printer Error	Expanded<SP>Error	1	0	0	0	0	0	1
Test Printing Mode	Test Printing Mode	Test printing	Test<SP>Printing	0	0	0	0	0	0	1
Setting Printing Mode	Setting Printing Mode	Test printing	Setting<SP>Printing	0	0	0	0	0	0	1
Buffer Full	Buffer Full	Busy	-	0	0	0	0	0	0	0
Printing	Processing	Waiting	-	0	0	0	0	0	0	0
Idle	Idle	Idle	-	0	0	0	0	0	0	0
Pause	-	-	-	-	-	-	-	-	-	-

The following information is added only when the ST command (06h) is sent with 02h or 03h.

Table 1-29. Supplemental printer information returned for 06h with 02h/03h.

Printer's information
"ST:"<status code>";"
["ER:"<error code>";"]
["TP:"<self print code>";"]
["PP:"<paper path>";"]
["CD:"<characteristic status codes>";"]
["IG:"<nn1><nn2><nn3>[","... <nnx1><nnx2><nnx3>]";"]
["TEC:"<ii1>";"]
FF

Reply for OPCMD 0Fh (Sends ASCII Message)

ASCII Message:

"TOPB"

"ENDB"

Background Job Command Count 1 & 2 and Message are different depending on the BGJC.

Table 1-30. Background job commands (BGJC)

BGJC number	Command	Response
0x00	Get device ID	Device ID & Normal response
0x01	Get all status	Printer Status & Normal response
0x03	Get specified EEPROM value	EEPROM value & Normal response
0x09	Get Network Settings	Normal response

Simplified Serial Interface Card

The bit rates (bps) available with the Simplified Serial I/F Card:

- 19200
- 9600
- 4800
- 2400
- 1200
- 600
- 300

1.2.8.7 Interface selection

The printer has 4 interfaces: the parallel interface, the USB interface, the Serial interface, and the Type-B optional interface. These interfaces are selected manually by SelecType, or selected automatically.

Manual selection

Any one of 4 interfaces can be selected by SelecType.

Automatic selection

The automatic interface selection is enabled by SelecType. In automatic interface selection mode, the printer is initialized to the idle state. It scans all interfaces once it is powered on. The interface that receives data first is selected. When the host stops data transfer and the printer is in stand-by state for the seconds specified by SelecType, the printer is returned to the idle state. As long as the host sends data or the printer interface is in a busy state, the printer keeps the interface selection status as it is.

Interface state and interface selection

When the parallel interface is not selected, the interface gets into a busy state. When the USB interface is not selected, the interface responds to an OUT transaction with NAK handshake. When the serial interface is not selected, the interface sends XOFF and sets the DTR signal to MARK. When the Type-B serial interface card is installed and it is not selected, the interface sends XOFF and sets the DTR signal to MARK. When the optional interface is not selected, the printer sets the "OFFLINE" bit of the MNSTS register to the optional interface. When the printer is initialized or returned to the idle state, the parallel interface enters a ready state, the USB interface is ready to respond to an OUT transaction with an ACK handshake, the serial interface sends XON and sets the DTR to SPACE, and the printer resets the "OFFLINE" bit of the MNSTS register to the optional interface.

Note that interrupt signals, such as the -INIT signal on the parallel interface, and the software reset on the USB interface, are not effective while that interface is not selected.

1.2.8.8 Host data transfer timeout prevention

Generally, host computers abandon data transfer to peripherals when a peripheral is in a busy state for an extended period of time. To prevent this kind of timeout, the printer continues to receive data very slowly, several bytes per minute, even if the printer is in a busy state. This slowdown starts when there are only a few thousands of bytes of remaining space in the input buffer. When the input buffer is completely full, the printer enters a busy state and stops receiving data.

- This host-timeout prevention scheme operates on the parallel I/F and on the USB I/F.
- This function is not required when IEEE 1284.4 mode is enabled on the parallel or USB interface.

1.2.8.9 IEEE 1284.4 protocol

The packet protocol described by IEEE 1284.4 is supported on the parallel I/F and the USB I/F. Two modes of the IEEE 1284.4 protocol, “Off” and “Auto”, are available, and are selected through SelecType. Refer to 1.3.3 SelecType functions setting (p.46).

The packet protocol options “Off” and “Auto” in SelecType mode are effective for both parallel and USB I/F.

Auto: Communication is carried out in the conventional mode until a magic string (1284.4 synchronous commands) is received. Once a magic string is received, communication in IEEE 1284.4 packet mode starts.

Off: Communication is carried out in the conventional mode.

When printing from a Windows-based printer driver, set the packet protocol to “Auto”.

The functionality of the “Off” mode in IEEE 1284.4 protocol is not guaranteed on the USB I/F.

NOTE: *The packet protocol of IEEE 1284.4 allows a device to carry on multiple exchanges or conversations that contain data and/or control information with another device at the same time across a single point-to-point link. However, the protocol is not a device control language. It does provide basic transport-level flow control and multiplexing services. The multiplexed logical channels are independent of each other and the blocking of one has no effect on the others. The protocol operates over IEEE 1284.*

1.3 Operations

This section describes the operations on this printer.

1.3.1 Control panel

The control panel of this printer is equipped with 9 switches, 6 LEDs and 1 LCD (16 characters × 2 line) which are located as shown below.

1.3.1.1 Buttons

The following table explains the button functions. Some buttons perform multiple operations.

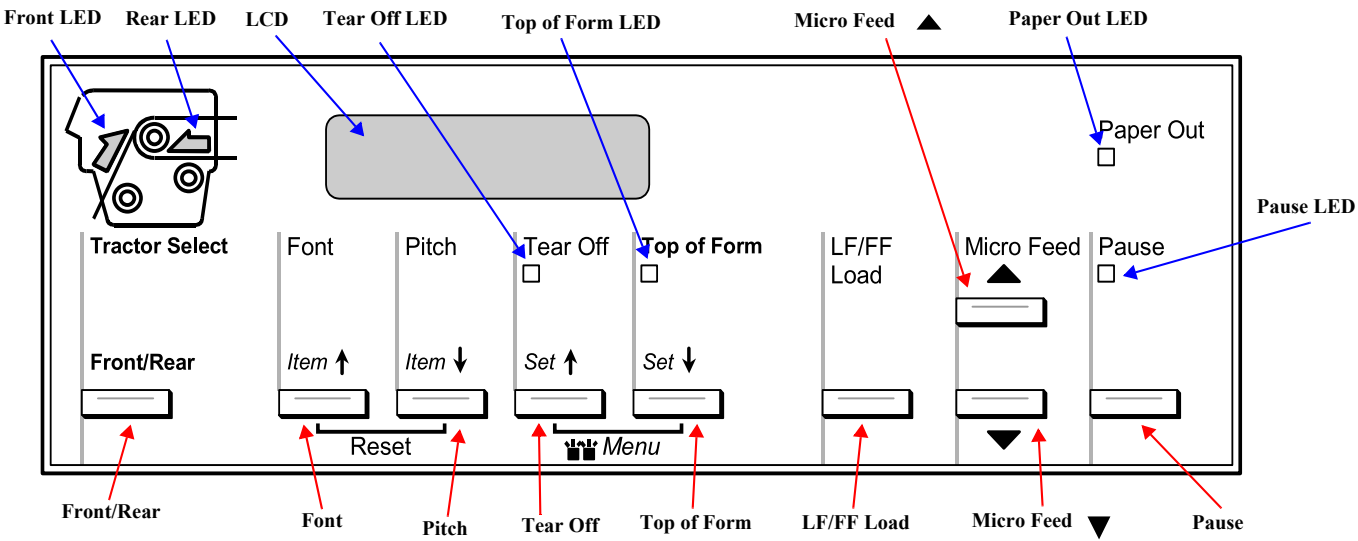

Figure 1-21. Control Panel buttons and LEDs

Table 1-31. Summary of button functions

Button	Function		
	Normal mode	At power on	SelecType mode
Pause	Switches between printing and non-printing status.	Bi-D adjustment	---
Micro Feed ▲	Executes micro feed forward.	---	---
Micro Feed ▼	Executes micro feed backward.	---	---
LF/FF Load	■ Loads paper once it is put on the tractors. ■ Executes a line feed when you press it briefly. ■ Executes form feed, when you hold it down for a one second.	Draft self test	---
Top of Form (Set↓)	This button operates only when the top cover is open. ■ Enters the Top of Form Adjustment mode when you press it. ■ Enters the Paper Loading Adjustment mode when pressed immediately after loading paper.	NLQ self test	Changes the setting.
Tear Off (Set↑)	Advances continuous paper to the Tear-off position.	---	Changes the setting.
Pitch (Item↑)	Selects the font pitch.	Selects pitch.	Selects the menu.
Font (Item↓)	Selects the font and draft quality.	Default setting mode	Selects the menu.
Front/Rear	Switches between the front and rear paper paths.	---	---
Reset (Font + Pitch)	Resets the printer.	---	---
Menu (Tear Off + Top of Form)	Enters or exits SelecType mode.	---	Enters or exits SelecType mode.
LF/FF Load + Top of Form	---	Data dump	---
LF/FF Load + Tear Off	---	Clears Driving Line count for ribbon change timing.	---
Pitch + Font	---	Panel lock out mode	---

Table 1-31. Summary of button functions

Button	Function		
	Normal mode	At power on	SelecType mode
Pause + Micro Feed ▼ + LF/ FF Load	---	Clears the EEPROM. See Clear EEPROM, p. 51	---
Pitch & Font & Front/Rear	---	Error analysis mode. See Error analysis mode (acquire EEPROM information), p. 52	---

1.3.1.2 LED indicators

This printer uses LEDs to indicate its condition. All LEDs blink together to indicate a fatal error. Other LED indications are described below.

Pause (Orange)

Turns on when the printer is paused or an error has occurred, and turns off when the printer is not paused.

Blinks when the printer is in the head hot condition.

Paper Out (Red)

Turns on when there is no paper loaded in the selected tractor, and blinks during a Paper jam error.

Tear Off (Green)

Turns on when the paper is in the Tear-off position.

Top of Form (Green)

Turns on when the Top of Form position and Loading position can be adjusted.

Front (Green/Red)

Green LED turns on when the front paper path is selected, and paper is loaded in the front tractors.

Red LED turns on when the front paper path is selected, but no paper is loaded in the front tractors.

Turns off when the rear paper path is selected.

Rear (Green/Red)

Green LED turns on when the rear paper path is selected and paper is loaded in the rear tractors.

Red LED turns on when the rear paper path is selected without paper in the rear tractor.

Turns off when the front paper path is selected.

Table 1-32. LED indication of printer status

Printer status	LED					
	Pause	Paper Out	Tear Off	Top of Form	Front	Rear
Pause	On	-	-	-	-	-
Paper out error	On	On	-	-	-	-
Paper jam error	On	Blink	-	-	-	-
Incomplete paper path change	On	-	-	-	-	-
Ribbon jam	On	-	-	-	-	-
Ink ribbon out	On	-	-	-	-	-
Cover open	On	-	-	-	-	-
Head hot warning	Blink	-	-	-	-	-
Tear off	-	-	On	-	-	-
Top of Form	-	-	-	On	-	-
Front paper path selected	-	-	-	-	On	-
Rear paper path selected	-	-	-	-	-	On
Fatal error	Blink	Blink	Blink	Blink	Blink	Blink

1.3.1.3 LCD screen messages

The control panel utilizes an LCD screen to display status information.

Table 1-33. LCD messages

Priority	Printer status	LCD Message
1	Fatal error[1]	`Error: XX` `Turn off printer`
2	Cover open error	`Error:` `Cover open`
3	Paper jam error	`Error:` `Paper jam`
4	Ribbon jam error	`Error:` `Ribbon jam`
5	Ink ribbon out error	`Error:` `Ribbon out`
6	Paper out error	`Error:` `Paper out`
7	Paper out error (Loading)	`Error:` `No paper loaded`
8	Incomplete paper-path change	`Error: Switching` `not completed`
9	Print head is overheated.	`Print head hot` `Please wait`
10	The entry to SelecType and Default setting mode	`Setting mode`
11	Panel lock out[2]	`Locked`
12	Top of Form (Loading position)[3]	`Loading position` `adjustment`
13	Top of Form[3]	`Top-of-form` `adjustment`
14	Tear Off	`Tear off` `Cut the paper`
15	Data is in buffer but printer is paused.	`Paused` `Data in buffer`
16	Pause	`Paused`
17	Bi-D adjustment	`Bi-D adjustment`
18	Test printing	`Test printing`
19	Hex dump mode	`Hex dump`
20	Normal printing	`Printing`
21	Program reload mode	`Program mode`
22	Stand by	`Ready`

Notes: 1. “XX” is the Fatal Error code. Refer to Chapter 3, section 3.2.1.1 List of fatal errors (p.103).

2. When a locked button is pushed, this message is displayed on the lower line.

3. When the cover is open, the message “Top of form” is displayed.

1.3.1.4 Buzzer

This printer has a buzzer to audibly indicate its status as shown in the table below:

The symbols used in the table below represent the following:

"•" Short Beep: Buzzer sounds for 1/10th sec. (100 ms) and the interval is 1/10th sec. (100 ms)

"–" Long Beep: Buzzer sounds for 1/2 sec. (500 ms) and the interval is 1/10th sec. (100 ms)

Table 1-34. Buzzer Status

Printer status	Beep sounds
Paper out error	• • •
Cover open error	• • •
Incomplete changing paper	• • •
Paper jam	• • •
Ribbon jam	• • •
Ink ribbon out	• • •
Fatal error	– – – – –

1.3.2 Basic functions

Pause

This stops or resumes printing.

When an incomplete paper change occurs, push this button to go to the next step.

When Tear Off is pressed, and the optional Perforation Cutter is not installed, the printer advances the paper to the tear off position and pauses. Press Pause after you have torn off the form to return the paper to the normal printing (Top of Form) position.

Micro Feed

Adjusts the paper position for Top of Form and Tear Off. The [Micro Feed▲] button advances the paper forward by 0.118 mm (1/216 inch), and the [Micro Feed▼] button advances the paper backwards by 0.118mm (1/216 inch).

The TOF (just after loading) adjustment range is 4.2 to 33.9 mm. The default setting is 8.5 mm (Default). The buzzer sounds at the minimum, default, and maximum positions.

The Tear off adjustment range is -25.4 to 25.4 mm, and the default is 0.0 mm. The buzzer sounds at the minimum, default, and maximum positions.

LF/FF Load

Immediately after loading paper in the selected push tractor, press this button to load continuous paper into the printer mechanism.

Pressing this button once executes a line feed.

Holding this button down for one second executes a form feed.

Top of Form

Enters the Top of form adjust mode and advances the paper so that the desired first line of print (characters' base line) can be aligned with the print-line mark on the ribbon mask holder. The Top of Form LED turns on, and the TOF position is adjustable with the [Micro feed] buttons in this mode.

When the [Top of Form] button is pressed again, this mode is terminated. The adjusted position is stored as TOF in non-volatile memory, and the paper is fed back to its position before entering this mode.

When the TOF adjustment is executed just after loading paper in the tractor, the adjusted position will be treated as the loading position.

This button operates only when the cover is opened.

Tear Off

Advances the paper until its perforation comes to the paper cutting part of the printer cover, and enters Tear Off mode. The Tear Off LED turns on and the Tear Off position is adjustable with the [Micro feed] buttons in this mode.

When the [Tear Off] button is pressed again, this mode is terminated. The adjusted position is stored as the Tear Off position in non-volatile memory, and the paper is fed back to its previous position.

Pitch

Press this button to select one of the following pitches.

- 10 cpi (factory default)
- 12 cpi
- 15 cpi
- 17 cpi
- 20 cpi
- Proportional

Font

Pressing this button selects one of the following fonts.

- High speed draft (factory default)
- Draft
- Roman
- Sans Serif

Front/Rear

Switches between the front and rear paper paths, provided paper is loaded and the optional Pull tractor is not used.

The printer feeds the paper in the newly selected path to the tear off position.

If the optional Perforation Cutter is installed, the paper is cut at the perforation and fed backward to the paper park position.

If the optional Perforation Cutter is not used, the printer enters an Incomplete Paper-path Change error as it waits for the user to tear off the form at the tear-off position, and push [Pause] or [Front/Rear]. The printer then feeds the paper backward.

Reset

Press the [Font] and [Pitch] buttons at the same time to initialize the printer.

Menu (SelecType)

Press the [Tear Off] and [Top of Form] buttons at the same time to display the SelecType menu. Refer to 1.3.3 SelecType functions setting (p.46).

1.3.3 SelecType functions setting

SelecType allows you to change many of the printer's operating settings. These settings are stored in non-volatile memory, and become the default settings each time the printer is initialized. To enter SelecType and review or change settings, do the following:

1. Make sure paper is loaded.
2. Press the [Menu] (Tear Off + Top of Form) buttons to enter SelecType mode. The LCD displays the selected language for this mode.
3. If the language you wish is not selected, press the [Set↑] (Tear Off) or [Set↓] (Top of Form) button until the LCD displays the preferred language.
4. Press the [Item↓] (Pitch) button to set the desired language.

CHECK POINT

The language you select is also used for other settings, modes, and test printouts, such as default-settings and printing a Hex Dump.

5. If you select Print Settings, press the [Set↓] (Top of Form) button to print the current settings.
6. Press the [Item↑] (Font) or [Item↓] (Pitch) button to select the menu parameters you wish to change.
7. Press the [Set↑] (Tear Off) or [Set↓] (Top of Form) button to select the values within the selected parameter until you find the desired setting.

CHECK POINT

In Step 6 and 7 above, you can scroll the values by holding down the [Set↑] (Tear Off), [Set↓] (Top of Form), [Item↑] (Font), or [Item↓] (Pitch) button for a few seconds.

8. After setting the selected parameter, you may either continue to make changes to other parameters by pressing the [Item↑] or [Item↓] button, or exit SelecType mode.

CHECK POINT

The SelecType menu is designed as a loop: It returns to the beginning of the menu after the last available menu parameter. See the SelecType function map, p. 47

SelecType only displays parameters that are valid for the printer's configuration. If no ethernet card is installed, for example, the IP address section of the menu will not be displayed.

9. When you finish reviewing or changing the settings, press the [Menu] (Tear Off + Top of Form) button.
10. The LCD displays "Save Setting". If you wish to save the settings, select "Yes" by pressing the [Set↑] (Tear Off) button. If you do not want to save the settings, select "No" by pressing the [Set↓] (Top of Form) button.

CAUTION

If you turn off the printer prior to exiting the SelecType mode, any changes you have made are canceled and not saved.

11. The printer exits SelecType mode.

CAUTION

Not all ethernet cards allow you to change their settings with SelecType, and some do not display their settings. Please confirm your settings once again with SelecType mode.

1.3.3.1 SelecType function map

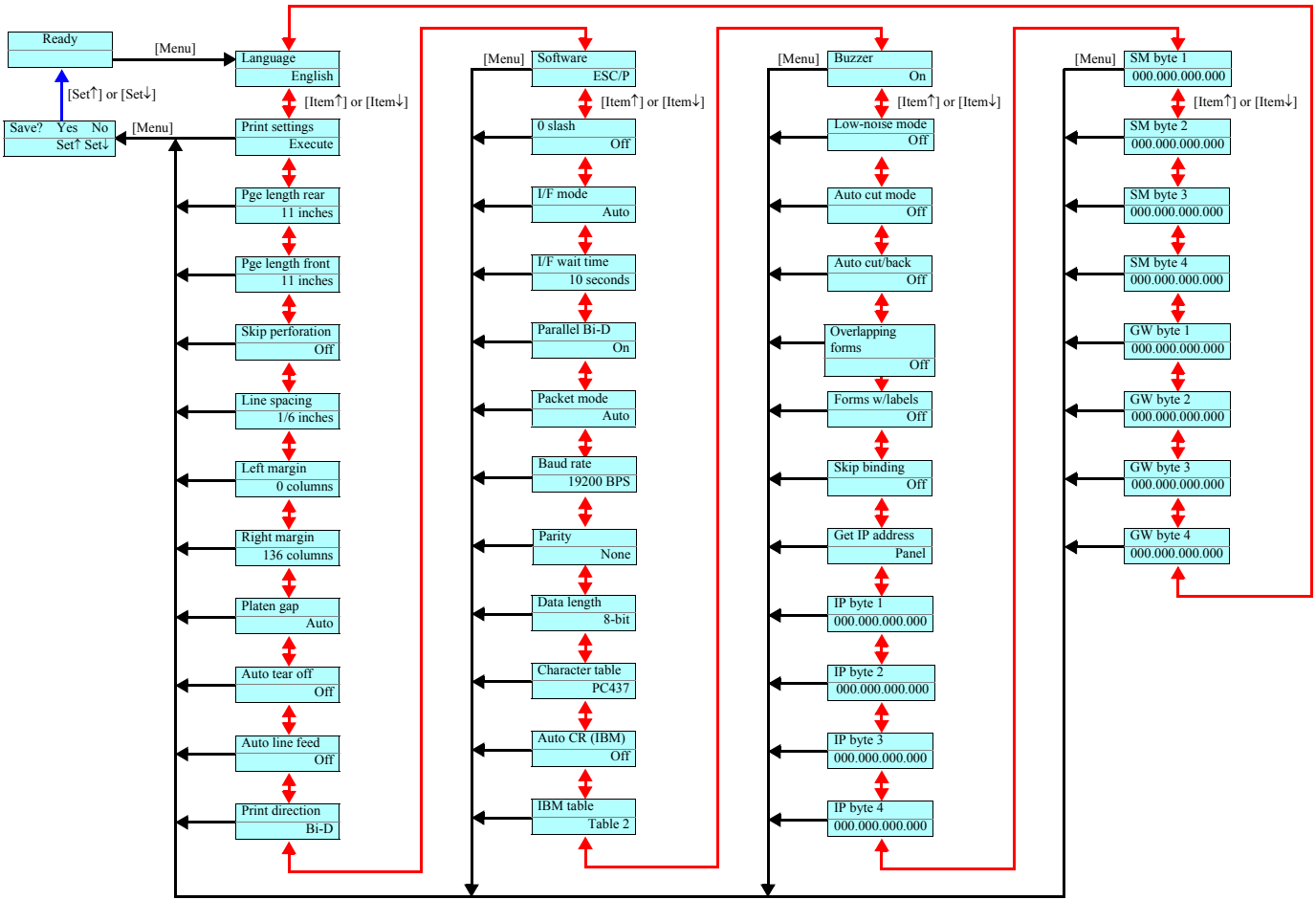

The SelecType values available are as shown in the table below. Underlined values are the factory default settings.

Table 1-35. Setting values available in Selectype

Setting Items	Setting Values
Language	**English**, Français, Deutsche, Italiano, Español, Português
Print settings	Execute
Pge length rear	3 inches, 3.5 inches, 4 inches, 5.5 inches, 6 inches, 7 inches, 8 inches, 8.5 inches, **11 inches**, 70/6 inches, 12 inches, 14 inches, 17 inches, XX.X inches[1]
Pge length front	3 inches, 3.5 inches, 4 inches, 5.5 inches, 6 inches, 7 inches, 8 inches, 8.5 inches, **11 inches**, 70/6 inches, 12 inches, 14 inches, 17 inches, XX.X inches[1]
Skip perforation	**Off**, On
Line spacing	**1/6 inches**, 1/8 inches, XXX/432 inches[1]
Left margin	**0** to 80 columns
Right margin	1 to **136 columns**
Platen gap	**Auto**, 0 to 14 (See Table 1-6)
Auto tear off	**Off**, On
Auto line feed	**Off**, On
Print direction	**Bi-D**, Uni-D
Software	**ESC/P**, IBM PPDS, Others[1]
0 slash	**Off**, On
I/F mode	**Auto**, Parallel, Serial, USB, Optional

Table 1-35. Setting values available in Selectype (continued)

Setting Items	Setting Values
I/F wait time	**10 seconds**, 30 seconds
Parallel Bi-D	Off, **On**
Packet mode	**Auto**, Off
Baud rate	**19200 BPS**, 9600 BPS, 4800 BPS, 2400 BPS, 1200 BPS, 600 BPS, 300 BPS
Parity	**None**, Odd, Even, Ignore
Data length	**8-bit**, 7-bit
Character table	***STD version:*** **PC437**, PC850, PC860, PC863, PC865, PC861, BRASCII, Abicomp, Roman8, ISO Latin 1, PC858, ISO 8859-15, Italic U.S.A., Italic France, Italic Germany, Italic U.K., Italic Denmark, Italic Sweden 1, Italic Italy, Italic Spain 1 ***NLSP version:*** **PC437**, PC850, PC860, PC863, PC865, PC861, BRASCII, Abicomp, Roman8, ISO Latin 1, PC858, ISO 8859-15, PC437 Greek, PC853, PC855, PC852, PC857, PC866, PC869, MAZOWIA, Code MJK, ISO 8859-7, ISO Latin 1T, Bulgaria, PC774, Estonia, ISO 8859-2, PC866 LAT., PC866 UKR, PC APTEC, PC708, PC720, PCAR864, PC771, PC437 Slovenia, PC MC, PC1250, PC1251, Italic U.S.A., Italic France, Italic Germany, Italic U.K., Italic Denmark, Italic Sweden 1, Italic Italy, Italic Spain 1
Auto CR (IBM)[2]	**Off**, On

Table 1-35. Setting values available in Selectype (continued)

Setting Items	Setting Values
IBM table[2]	**Table 2**, Table 1
Buzzer	Off, **On**
Low-noise mode	**Off**, On
Auto cut mode	**Off**, On
Auto cut/back	**Off**, On
Overlapping forms	**Off**, On
Forms w/labels	**Off**, On
Skip binding	**Off**, On
Get IP address[3]	Panel, Auto, PING
IP byte 1[4]	000.000.000.000 to 255.255.255.255
IP byte 2[4]	000.000.000.000 to 255.255.255.255
IP byte 3[4]	000.000.000.000 to 255.255.255.255
IP byte 4[4]	000.000.000.000 to 255.255.255.255
SM byte 1[3]	000.000.000.000 to 255.255.255.255
SM byte 2[3]	000.000.000.000 to 255.255.255.255
SM byte 3[3]	000.000.000.000 to 255.255.255.255
SM byte 4[3]	000.000.000.000 to 255.255.255.255
GW byte 1[3]	000.000.000.000 to 255.255.255.255
GW byte 2[3]	000.000.000.000 to 255.255.255.255
GW byte 3[3]	000.000.000.000 to 255.255.255.255
GW byte 4[3]	000.000.000.000 to 255.255.255.255

Notes:
1. When one of the values is not chosen, it shows “Others”.
2. This setting is available only in IBM PPDS emulation mode.
3. When the network card is recognized, these settings display and can be setup.
4. When the network card is recognized and “Get IP address” is not “Auto”, these settings display and can be setup.

1.3.4 Special operations

The following shows how to start up and operate the special functions.

1.3.4.1 Special user functions

Self test

Prints the self test pattern. To cancel it, pause the printer and turn off the power.

Draft self test

Turn on the printer while holding down the [LF/FF Load] button.

NLQ self test

Turn on the printer while holding down the [Top of Form] button.

NOTE: *To stop the printer during the self test print, press the [Pause] button.*

Data dump

Starts the data dump mode in which all the input data are printed as hexadecimal numbers and corresponding characters.

Setting method: Turn on the printer while holding down both the [Top of Form] and [LF/FF Load] buttons.

NOTE: *The hex dump feature is designed for a connection with a DOS-based PC. When printing from the printer driver of a Windows-based PC, disable the bi-directional support setting in the printer driver.*

NOTE: *Data Dump mode is canceled when you turn the printer off.*

Bi-D adjustment

Setting method

1. Close the cover and turn the printer on while pressing the [Pause] button.
2. The printer prints the adjustment instructions, and the first alignment pattern.
3. Select the most closely aligned pattern number using the [Item↑] (Font) or [Item↓] (Pitch) buttons to scroll through the selection numbers. The LCD shows the pattern number currently selected.
4. Select the best pattern number by pressing the [Set↓] (Top of Form) button. That pattern number is saved, and the next alignment pattern is printed.
5. Repeat steps 3 and 4 until you have completed the Bi-D adjustment for high-speed draft, draft, and NLQ printing modes.
6. Turn the printer off. The Bi-directional adjustment settings are stored in non-volatile memory.

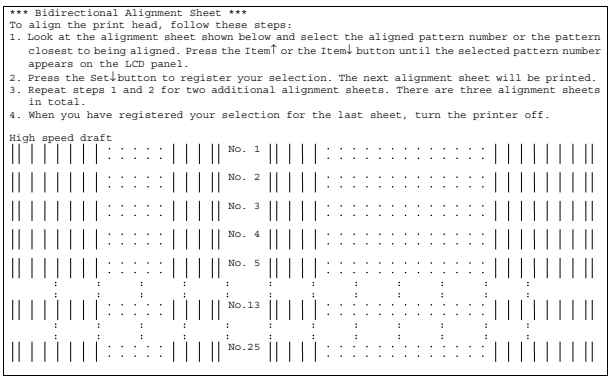

Figure 1-22. Bi-D adjustment print

1.3.4.2 Special service functions

Clear EEPROM

This function resets the printer to the standard factory settings. Note that these settings may not be correct for all geographical markets.

CAUTION

This function should only be used for emergency recovery of the factory default settings.

To initialize the EEPROM, turn the power on while holding down the [Pause], [Micro Feed▼], and [LF/FF Lord] buttons.

NOTE: *After clearing the contents, the factory default parameters are set.*

Panel lock out mode

You can restrict the use of buttons on the control panel using the Panel Lock Out mode. In the default setting, you can only use the Pause, Load, and Tear Off buttons when Panel Lock Out mode is on. These settings can be changed using the Power-on default setting mode, p. 51.

To turn on the Panel Lock Out mode, perform the following:

1. Make sure the printer is turned off.
2. Turn on the printer while holding down both the [Font] and [Pitch] buttons. The printer beeps twice, indicating that the panel lock out mode has been turned on.

To turn off the panel lock out mode, repeat steps 1 and 2. The printer beeps once, indicating that the panel lock out mode has been turned off.

The table below shows the available custom lockout settings, with the factory default settings underlined.

Table 1-36. Panel lock out mode - setting status

Item	Setting Values
Pause	**Unlock**, Lock
Micro Feed	Unlock, **Lock**
Load	**Unlock**, Lock
LF	Unlock, **Lock**
FF	Unlock, **Lock**
Top of Form	Unlock, **Lock**
Tear Off	**Unlock**, Lock
Font	Unlock, **Lock**
Pitch	Unlock, **Lock**
Front/Rear	Unlock, **Lock**
Menu	Unlock, **Lock**
Reset	Unlock, **Lock**

Notes: 1. If Unlock is selected, the switch function is enabled whether Panel Lock Out mode is on or off.

2. If Lock is selected, the switch function is disabled when Panel Lock mode is on.

Power-on default setting mode

You can change some parameters that the printer refers to when it is initialized. To change the Power-On Default settings:

1. Make sure paper is loaded and turn the printer off.
2. Turn on the printer while holding down the [Font] button to enter default-setting mode. The message Setting mode appears on the LCD panel.

CHECK POINT

The instructions and current settings are printed out in the language that you set in the SelecType mode. If you want to change the language, change the language setting in the SelecType mode. See 1.3.3 SelecType functions setting (p.46) for details.

3. Select one of the three main menus by pressing the [Set↑] (Tear Off) or [Set↓] (Top of Form) button: Print settings, Form w/labels, or Panel lock out.
4. If you select Print Settings, press the [Item↓] (Pitch) button to print the current settings.

   If you select Form w/labels or Panal lock out, press the [Item↑] (Font) or [Item↓] (Pitch) button to select the items you want to change.
5. Press the [Set↑] (Tear Off) or [Set↓] (Top of Form) button to select the values within the selected parameter until you find the desired setting.

CHECK POINT

In Step 3 to 5 above, you can scroll through the values by holding down the [Set↑] (Tear Off), [Set↓] (Top of Form), [Item↑] (Font), or [Item↓] (Pitch) button for a few seconds.

6. After setting the selected parameter to the desired value, you may either continue to make changes to other parameters by pressing the [Item↓] button or the [Item↑] button, or exit the power-on default-setting mode.
7. When you finish the settings, turn the printer off.

CHECK POINT

The menu is designed as a loop. After the last menu parameter is displayed, the next menu item will be the first menu.

The values available for power-on default and factory settings are shown in the table below. The underlined value is the factory default settings.

Table 1-37. Values available in default setting mode

Item	Setting Values
Select settings	Forms w/labels, Panel lock out[1], Print settings[2]
Label base pos.	**Paper left edge**, First dot
Label top pos.	**0/216 inches** to 4752/216 inches
Label length	**0/216 inches** to 4752/216 inches
Label left pos.	**0/120 inches** to 1440/120 inches
Label width	**0/120 inches** to 1440/120 inches
Base sheet PG	**0** to 14
Label paper PG	**0** to 14

Notes: 1. Refer to Panel lock out mode, p. 51 for details.
2. This setting is the function that prints the current settings.

Error analysis mode (acquire EEPROM information)

This printer mode allows the host system to communicate with the printer while it is in an error state.

To enable Error Analysis mode, turn the power on while holding down the [Front] and [Pitch] buttons. The printer beeps once, and enters IEEE 1284.4 Protocol mode.

NOTE: *The printer forcibly enters IEEE 1284.4 packet mode even if a fatal error has occurred, and communication with the PC becomes available. This mode is used with the Adjustment Program to get information from the printer when it is in a fatal error condition.*

1.4 Dimensions and weight

Physical specifications

Dimensions: 700 mm (W) × 378 mm (D) × 363 mm (H)
27.5 inches × 14.9 inches × 14.3 inches

Weight: 34 kg / 75 lbs

Appearance: See the figure below.

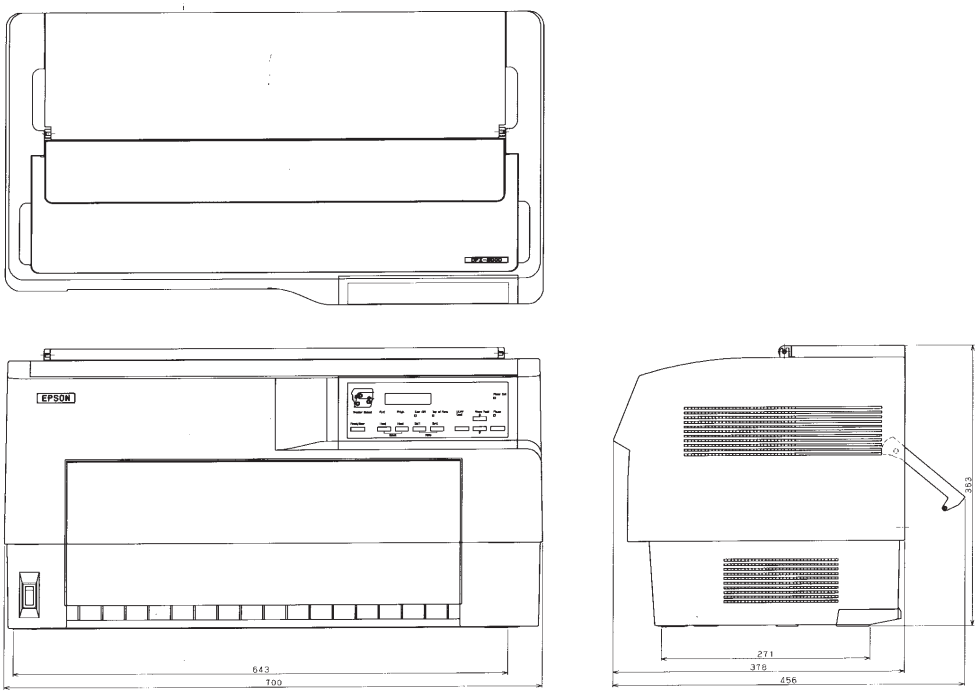

Figure 1-23. Physical specifications

CHAPTER

2

OPERATING PRINCIPLES

2.1 Overview

The main components for removal and repair are:

ROM board:	Control board
Power unit:	Power supply board
OP board:	Operation panel board
Printer mechanism:	Print Head Carrier mechanism Ribbon mechanism Paper feed mechanism APTC mechanism

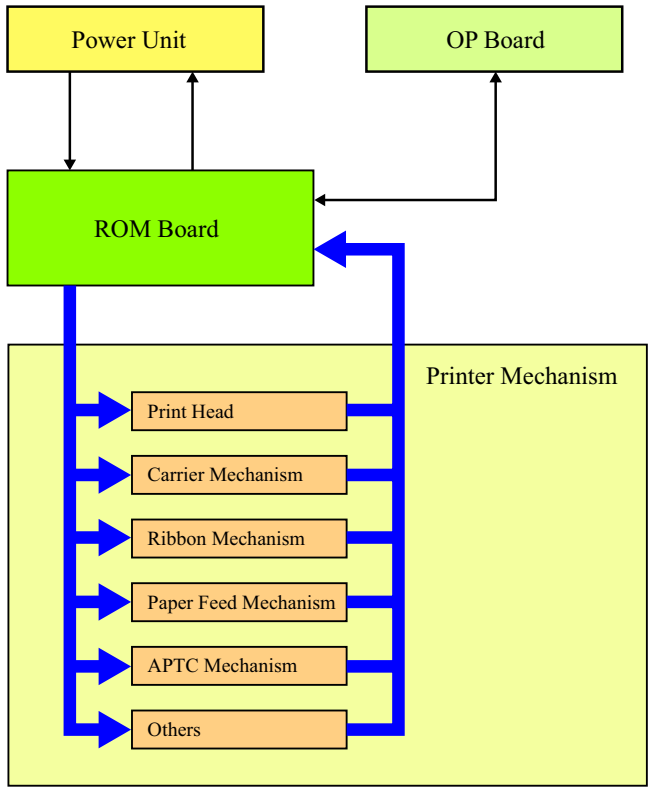

Figure 2-1. Main Components

2.1.1 Part names

Some of the part names used in the DFX-9000 differ from part names traditionally used in Epson printers. The table below provides part name definitions.

Table 2-1. Part name definitions

DFX-9000	Traditional Epson	Definition
Carrier Unit	Carriage Unit	The mechanism that transports the Printhead across the page during printing.
SP Motor	CR Motor, Carriage Motor	The motor that supplies force to the SP Belt, moving the Carrier.
CR Motor Driver		The circuit that supplies control and power to the SP Motor.
SP Belt	CR Belt	The drive belt that moves the Carrier.
LF Motor LF Belt	PF Motor PF Belt	Paper feed motor. Paper feed drive belt.
APTC APTC Motor	Platen gap adjustment mechanism	APTC: Automatic Paper Thickness Control.
HCPP (motor, sensor, etc.)	Tractor select mechanism	Host Computer-controlled Paper Path (HCPP): The paper-path (front/rear) switching mechanism, controllable through the print driver and application software.

Table 2-1. Part name definitions (continued)

DFX-9000	Traditional Epson	Definition
OC Motor		The Open/Close motor moves the rollers to clamp the paper in place during printing, and releases the paper during paper eject. Paper is clamped between the Nip rollers and DV rollers.
PR MECHA ASY	Printer Mechanism	The printer mechanism.

2.2 Printer mechanism

The operating principles of the printer mechanism are described below, and includes the following sections:

2.2.1 Printhead (p.58)

2.2.2 Carrier drive mechanism (p.61)

2.2.3 Ribbon drive mechanism (p.63)

2.2.4 Paper feed mechanism (p.64)

2.2.4.1 Tractor mechanism (p.64)

2.2.4.4 Paper path switching mechanism (p.69)

2.2.4.5 Paper eject mechanism (p.70)

2.2.5 Automatic Paper Thickness Control (APTC) mechanism (p.72)

2.2.6 Other mechanisms (p.75)

2.2.6.1 Top cover open/close detection mechanism (p.75)

2.2.6.2 Cooling fans (p.76)

2.2.1 Printhead

The printhead contains 36 coils that drive armatures to which the print wires are attached.

When not firing, the armatures are pushed back to the stopper by coil springs. When the coil is energized, the armatures, attracted by the magnetic field, move the print wires in the direction of the red arrow below in Figure 2-2. The print wires, guided by the wire guides through the front of the printhead, strike the ribbon and then the print media behind the ribbon. When the coil current is switched off, the armatures are pushed back to the stopper again by the coil springs and enter the print-waiting state.

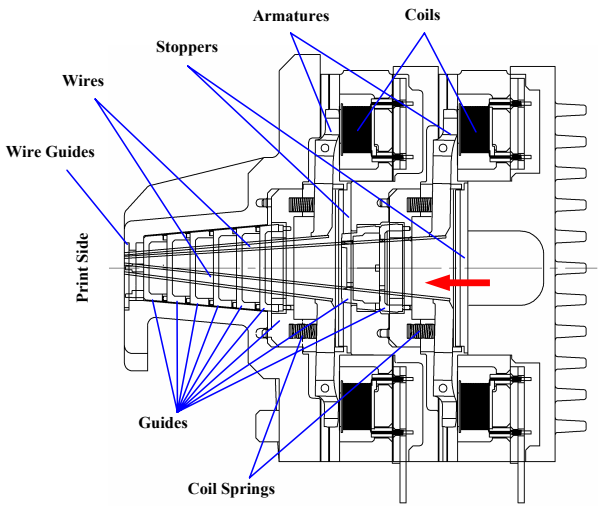

Figure 2-2. The Print Head Structure

2.2.1.1 Printhead pinout

The printhead is comprised of four 9-pin heads. The four heads are arranged in two head pairs, Front and Rear. Head numbers 3 and 4 comprise the Rear head (inner pins in the matrix), and head numbers 1 and 2 comprise the Front head (outer pins).

The thirty six print wires are arranged in a diamond-shape as shown in Figure 2-3, which also shows the pin-out matrix of the four printheads.

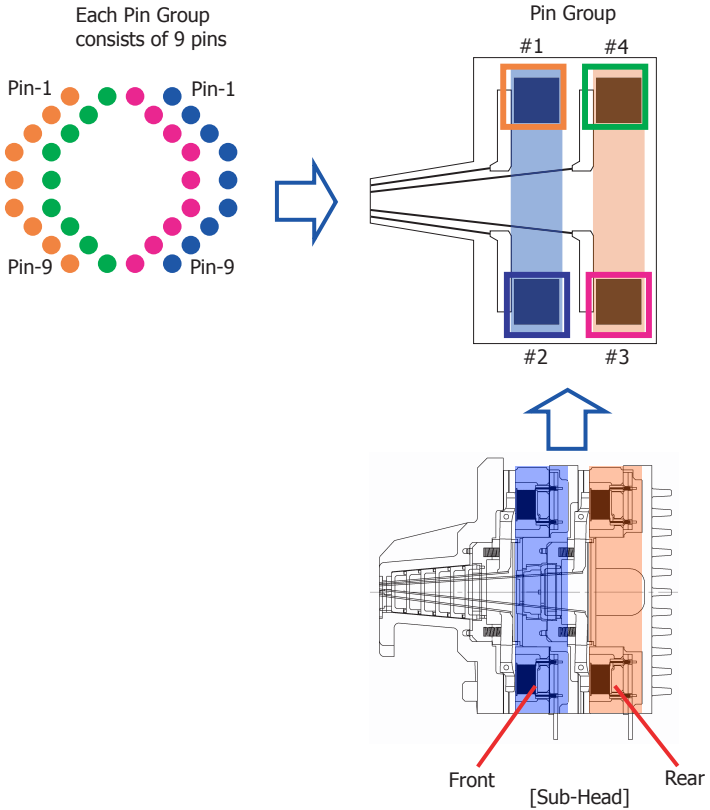

Figure 2-3. The pin-out of the four print heads

2.2.1.2 Pin assignment for printing

The printhead drive circuit is equipped with a print data register that has data capacity for 9 pins × 69 columns. The print data register controls pin assignment based on the data in the register so that the pin use is evenly distributed. For example, Pin 1of each of the four printheads is used the same number of times to print one line. The image below illustrates the print data assignment to print the characters THE.

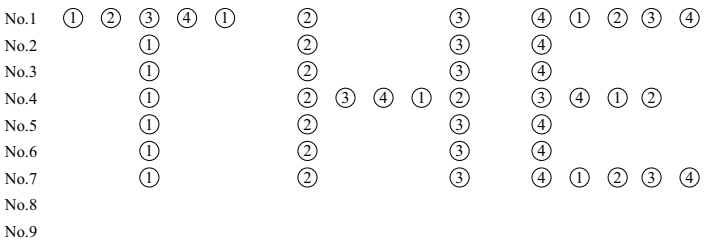

Figure 2-4. Print data and pin assignment example.

2.2.1.3 Printhead protection control

There are two types of controls to protect the printhead and they work as follows.

Undervoltage protection

The nominal operating voltage of the printhead is 42 V. When the voltage drops below 39.76 V, printing momentarily stops and then resumes at half the normal print speed.

Thermal protection

When temperatures detected by the thermal sensors on the front and rear of the printhead are substantially different from each other, printing is paused or stopped.

Table 2-2. Thermal sensor and print operation control

Temperature	Printing operation	Thermistor resistance
114 °C	Carriage paused at each pass	0.727 kΩ
Less than 114 °C	Normal printing resumes	0.728 kΩ
116 °C	Printing stops	0.695 kΩ
Less than 114 °C	Normal printing resumes if it had stopped	> 0.727 kΩ

The following processes are performed when the thermal sensors detect an abnormally high temperature level.

1. If the printhead temperature reaches114 °C, the printer will pause for 0.5 second each time the Carrier reaches the right and left end.
2. When the temperature is 116 °C, printing stops.
3. When the temperature level drops below 114 °C, normal printing resumes.

2.2.2 Carrier drive mechanism

The Carrier unit is attached to the SP (CR) belt, which has a driven pulley on one end and an idle pulley on the other. Drive force is transmitted from the SP motor to the SP belt, and the Carrier unit moves horizontally guided by both the Carriage shaft and Guide stay.

The Shield plate on the left side of the Guide Stay is used to detect a horizontal reference position for the Carrier unit.

When printing, the position of the Carrier unit is determined by the CES scale and the CES sensor on the Carrier unit, with reference to the print start position and the motor speed. The resolution of the CES scale is 1/120 inch.

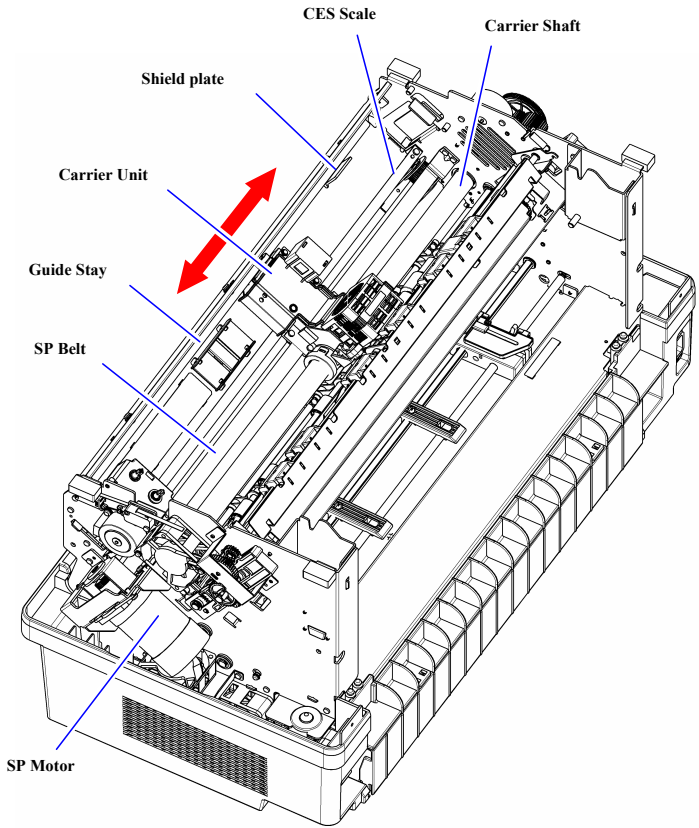

Figure 2-5. The Drive Section of the Carrier Unit

2.2.2.1 Carrier mechanism error detection

There are two error detection methods for the Carrier drive mechanism:

SP motor out-of-step error

The stop positions are calibrated during the Carrier unit positioning initialization in order to prevent stop-position variations caused by mechanical load or SP motor variations. The Left Edge sensor (LES) corrects the deceleration-start position after measuring the gap between the actual and predetermined stop positions. If the gap is bigger than the allowable correction value, the SP motor is determined to be out of step, resulting in a fatal error. (fatal error: LES error). The error occurs under the following conditions:

- When the LE sensor cannot detect the Shield plate though it is in position to do so.
- When the LE sensor detects the Shield plate when the sensor is not in position to do so.

The out-of-step detection is not carried out each carriage pass. It is performed whenever the Carrier unit passes over the Shield Plate while printing or during other normal carriage operations.

CR motor driver error

The CR motor driver error (fatal error: CR driver error) occurs under the following conditions:

- When a damaged SP motor, or defective SP motor driver, causes an abnormal electric current.
- When a single phase of the SP motor is live with electricity for an abnormal period of time.

The +42 V power supply hardware is shut off when this error is detected.

2.2.2.2 SP motor thermal protection control (with built-in thermistor)

To prevent the SP motor from burning out, if the SP motor temperature rises above a preset threshold, printing operations are modified to include a one-second pause at the end of each print pass. This is repeated for five passes, and the temperature is evaluated again. Normal printing resumes once the temperature drops into normal operating range.

2.2.3 Ribbon drive mechanism

The drive force from the Ribbon Feed (RF) motor is transmitted via the Bevel Gear, Gear, and the RF Gear. The RF Gear is directly linked to the RF Shaft, which rotates the ribbon. The RF Shaft rotates in one direction only, regardless of which direction (right or left) the Carrier unit moves.

Ribbon jam detection

The Ribbon Feed Shaft (RFS) sensor detects the rotation of the RF shaft directly engaged to the driven roller inside the ribbon cartridge. If a ribbon stops feeding, the RFS sensor detects that the RF shaft has stopped. Printing stops, and a “Ribbon Jam” error message is displayed on the control panel LCD.

Ribbon installation detection

The Ribbon Mechanical Switch (RMS) switch is pressed down when a ribbon cartridge is installed. If the switch is not pressed down at power-on, the printer indicates an error (“Ribbon out”) and will not continue the initialization operation.

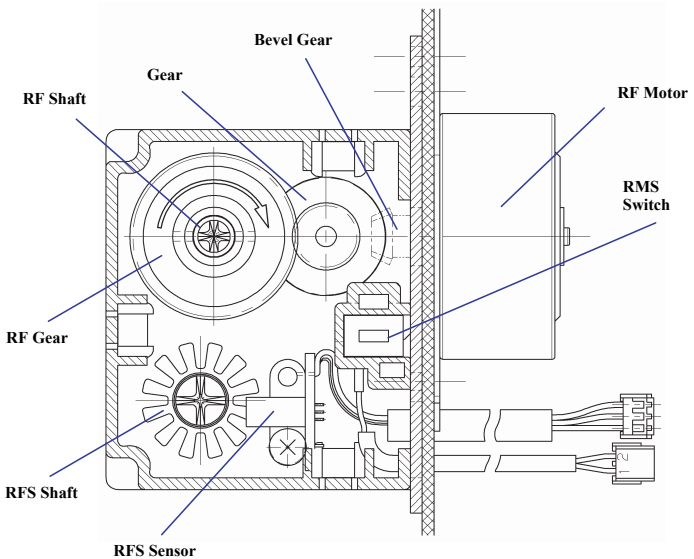

Figure 2-6. Ribbon Drive Mechanism

2.2.4 Paper feed mechanism

2.2.4.1 Tractor mechanism

The Line Feed (LF) motor drive system is a unipolar, constant current drive.

The (LF) motor rotates the Drive (DV) roller and Pin belt tractor. The LF motor drive is transmitted to the Front or Rear tractors and the Front and Rear DV rollers as shown in the flow chart below.

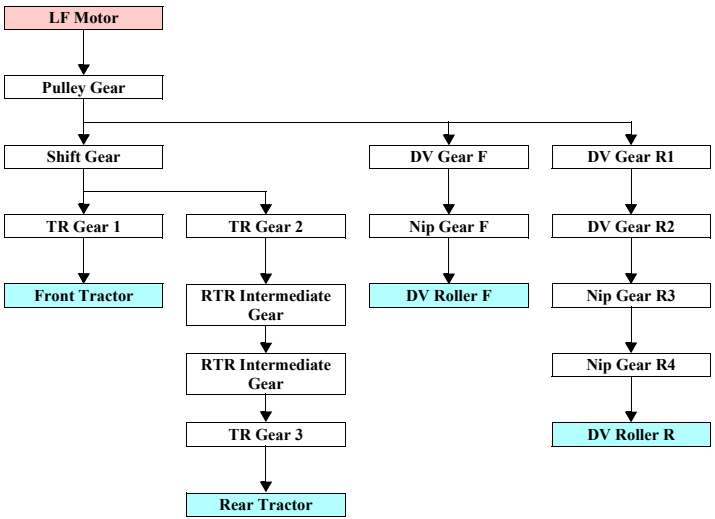

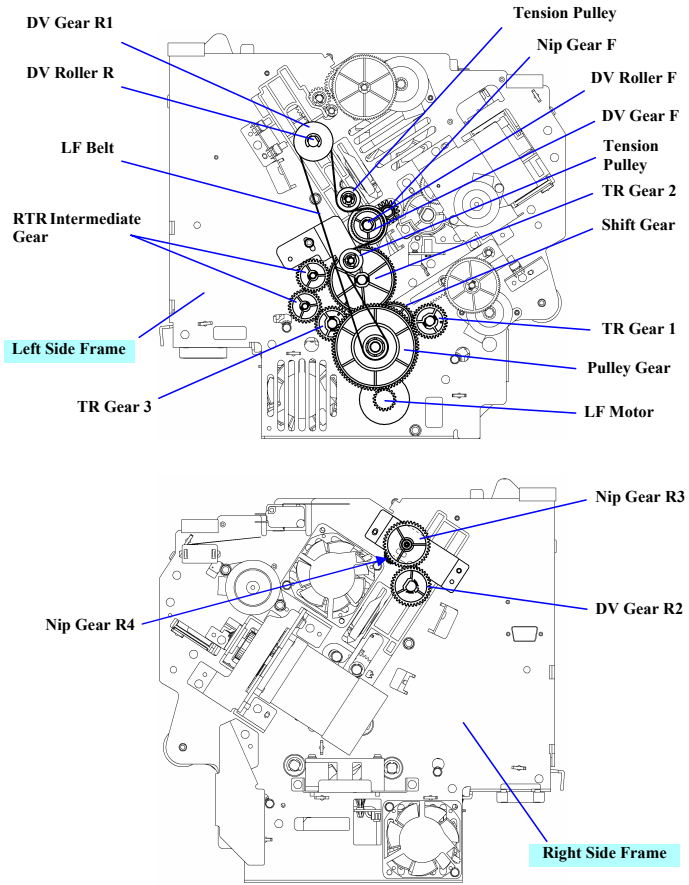

Figure 2-7. Tractor Mechanism

Continuous form feeding

Continuous forms are fed by a pair of Pin belt tractors attached to the left and right ends of the Tractor shaft (square shaft). A continuous form fed by the Pin belt tractors moves along the paper guide section where it is picked up by the DV roller F and 1st Nip Roller. Continuing upward, it is fed across the Platen and directed by the Card guide on the Carrier unit. After the form has passed the Card guide, it is transported and ejected by the Paper eject unit.

The Pin belt tractors, DV roller F and Paper eject unit are all driven by the LF motor.

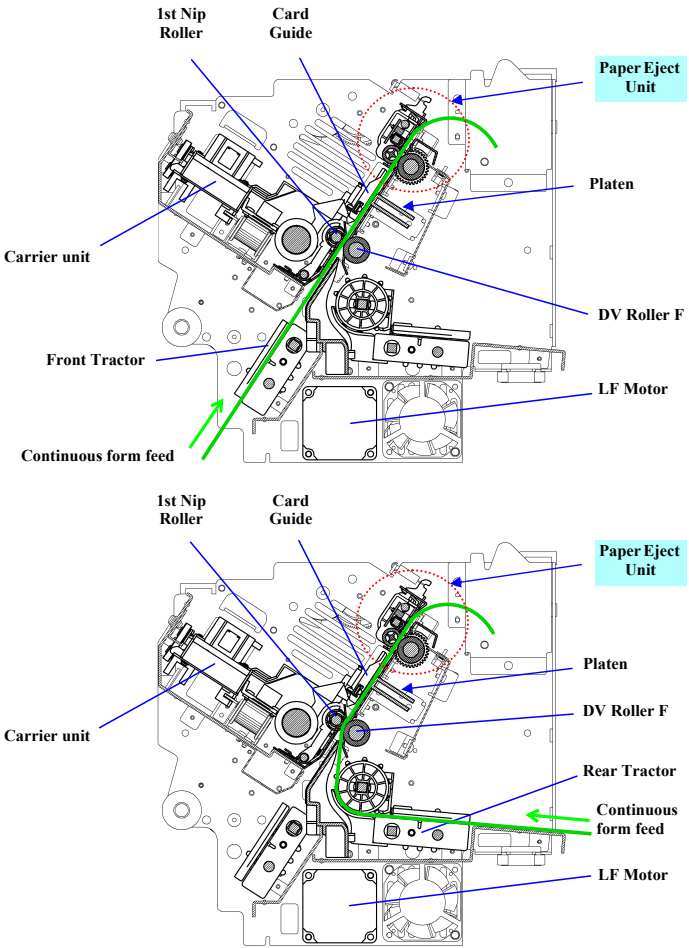

Figure 2-8. Continuous Business Form Feed

2.2.4.2 Paper detection

Paper is detected by sensor levers located on the tractors, and reflective sensors on the Card guide and Paper eject unit.

Paper sensor

The photo sensors on the tractors are shielded or unshielded by the movement of the sensor-lever. If paper is not loaded, the sensor lever shields the sensor to indicate that paper is not set on the tractor.

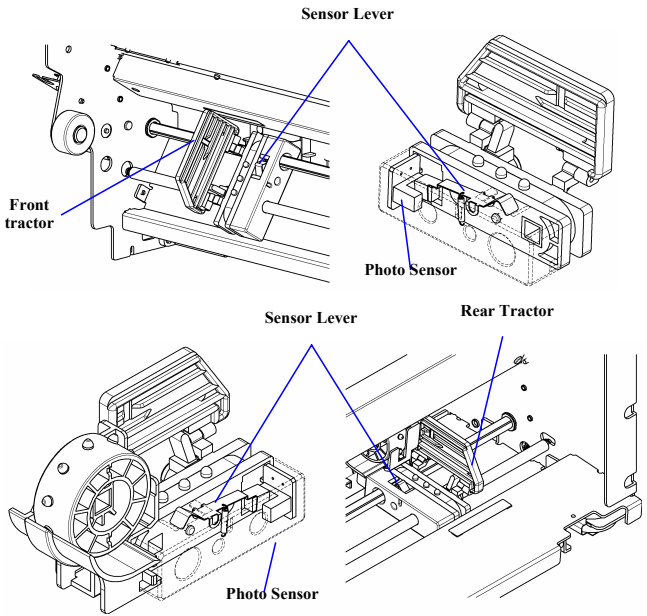

Figure 2-9. Paper detection 1

Top of form sensor

The reflective Top of Form sensor (TOFS) attached to the Card guide detects the presence of paper by receiving light reflected from paper. The sensor also detects line feed position, i.e. the amount of line feed after paper detection.

Top of paper eject sensor

The reflective Top of Paper Eject sensor (TPES) inside the Paper eject unit detects the presence of paper in the same way as the TOFS. The sensor also detects the top and bottom edges of paper when it is loaded.

Paper jam detection

Paper travel is detected by the magnet roller and the Hall IC (PJS) located on the 1st Nip Roller. When the Hall IC detects an abnormal rotation of the magnet roller, line feed and then printing stop, and the control panel LCD displays the message:

Error:
Paper jam

Remove the jammed paper and press [PAUSE] to clear the error.

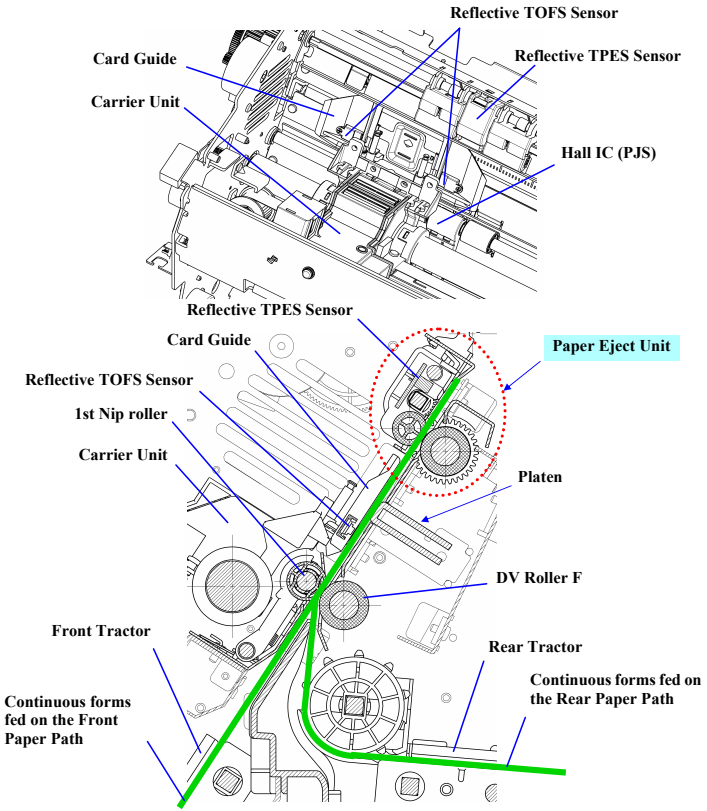

Figure 2-10. Paper detection 2

2.2.4.3 Auto paper feed

Once set onto the tractors, paper is loaded into the mechanism using the control panel. Press the [LL/LF Load] button and the carriage moves to the center. The LF motor then drives the paper feed mechanism to feed the paper. The paper is directed by the Card Guide on the CARRIER UNIT, and stops at a position detected by the reflective TOFS sensor on the Card guide.

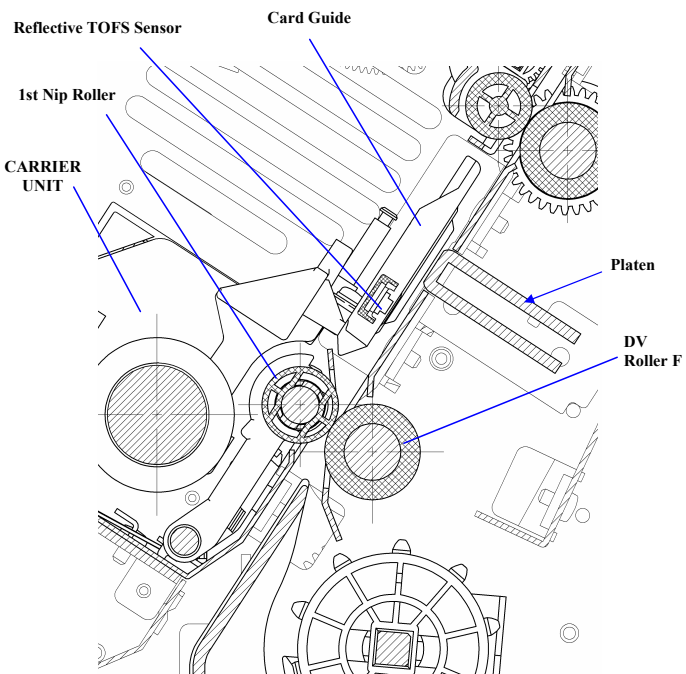

Figure 2-11. Auto paper feed

Tractor feed mechanism error detection

An error in the tractor feed mechanism is detected by the PF driver (Fatal error: PF driver error) under the following conditions:

- When a damaged LF motor, or defective LF motor driver, causes an abnormal electric current.
- When a single phase of the LF motor is energized for longer than the allowable time.

The +42 V power supply is shut off by hardware when this error is detected.

There is no circuit to detect LF motor rotations, so there is no out-of-step error detection for the LF motor.

2.2.4.4 Paper path switching mechanism

The switch between front-feed and rear-feed is made automatically by the Host-computer Control Paper Path (HCPP) motor drive. The drive force is transmitted to the HCPP motor gears and HCPP slide cams, and moves the Shift gear. The Shift gear slides to switch the paper paths, which is recognized by the Paper Path Shift sensor (PPSS) installed on the left side frame. The HCPP motor drive system is unipolar and constant current.

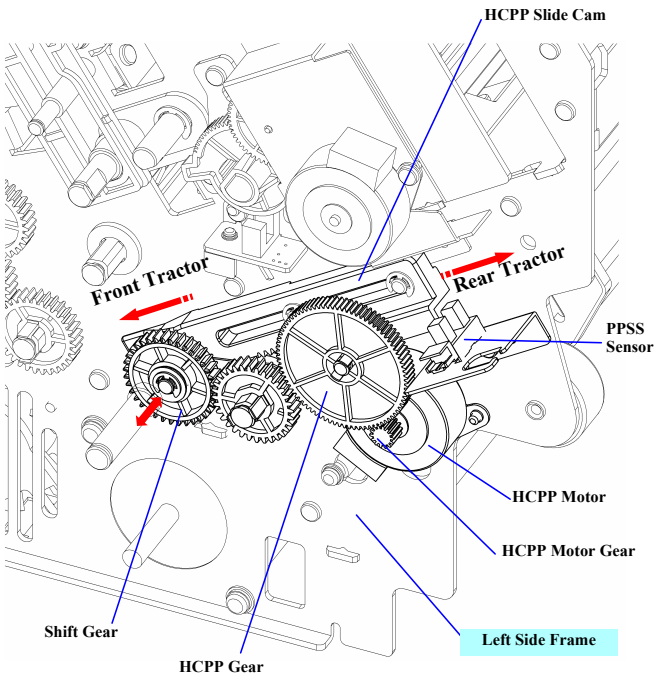

Figure 2-12. Paper path switching mechanism

Paper path switching mechanism error detection

Paper path switching mechanism errors are detected by the HCPP motor driver. The error (Fatal error: HPCC driver error) is detected when a single phase of the HCPP motor is energized for longer than the allowed period of time. The +42 V power supply is shut off by hardware when this error is detected.

A HCPP motor out-of-step error cannot be detected; the mechanism does not include a circuit to detect rotations of the motor.

2.2.4.5 Paper eject mechanism

The DV roller R and the Nip roller in the Paper eject unit operate to prevent line feeding errors. The drive force of the Open/Close (OC) motor moves the OC slide cams on the left and right frames, and the two cams move the Drive (DV) Roller R and the Nip roller to contact (closed) or not contact (open) each other. The closed or open status is detected by OC sensor 1 and OC sensor 2 on the left side frame. The OC motor drive system is a unipolar, constant current drive.

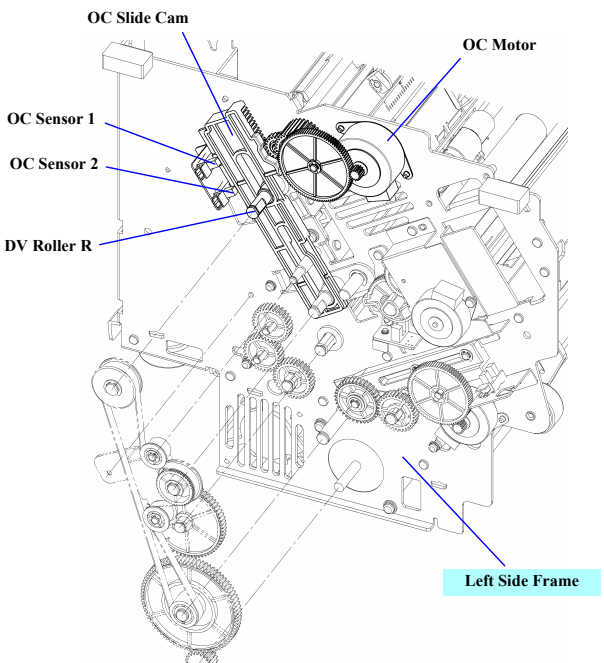

Figure 2-13. Paper eject mechanism

Paper eject operation mode

Condition	Roller 1	DV Roller R	Status
1	Close	Open	From paper loading until the top edge of the paper has advanced 41 mm (from head center)
2	Close	Close	■ Normal and Reverse line feeding ■ When the Carrier moves to the ribbon replacement position (see Note 2) ■ When a ribbon jam occurs
3	Open	Open	When paper is fed backward or when a paper jams occurs

NOTES:

1. If condition 1 or 3 is interrupted by a condition 2 event when the Carrier unit to moves to the ribbon replacement position, the rollers will return to the prior condition (1 or 3) the next time the Carrier unit moves.
2. The Carrier unit moves to the ribbon replacement position under the following conditions:
   - When the power is turned ON
   - When the printer is in PAUSE
   - After the printer is reset
   - Three seconds after entering an idle state
   - After the paper eject operation is complete

Paper eject mechanism error detection

An error in the paper eject mechanism can be detected by the Open/Close (OC) motor driver. The error (Fatal error: OC driver error) is detected when a single phase of the OC motor is energized for longer than the allowed period of time. The +42 V power supply is shut off when this error is detected.

An OC motor out-of-step error cannot be detected because the mechanism does not include a circuit to detect motor rotations.

2.2.5 Automatic Paper Thickness Control (APTC) mechanism

The Automatic Paper Thickness control (APTC) mechanism includes the APTC unit, Carrier shaft, and the Guide stay.

The Carrier transports the Printhead, and travels horizontally along the Carrier Shaft and Guide Stay. Both ends of the Carrier shaft are eccentric, and they are attached by bearings to the side frame. As the Carrier unit slides along the Guide stay, a parallelism adjustment and a printhead gap adjustment are performed. The automatic paper thickness adjustment is made as follows:

1. The SS Gear on the left side of the eccentric Carrier shaft, engaged with the gear on the APTC unit, rotates the Carrier shaft to move the Carrier unit (Printhead) away from the paper contact position.
2. The APTC Home Position (HP) sensor detects that the Carrier unit reaches the furthest position by checking the phase of the SS Gear.
3. The Carrier unit is then moved back toward the paper by the APTC motor until the APTC sensor detects a change in the APTC motor load caused by contact with the paper.
4. The printhead-to-paper gap is set by stopping and locking the APTC motor when the Carrier unit reaches a set distance away from the paper as detected by the APTC sensor.

The APTC motor drive system is a unipolar, constant current drive.

Table 2-3. APTC Motor direction and Carrier movement

Rotational Direction of APTC Motor	The Carrier movement direction
Clockwise	Backward: platen-gap wider
Counter-clockwise	Forward: platen-gap narrower

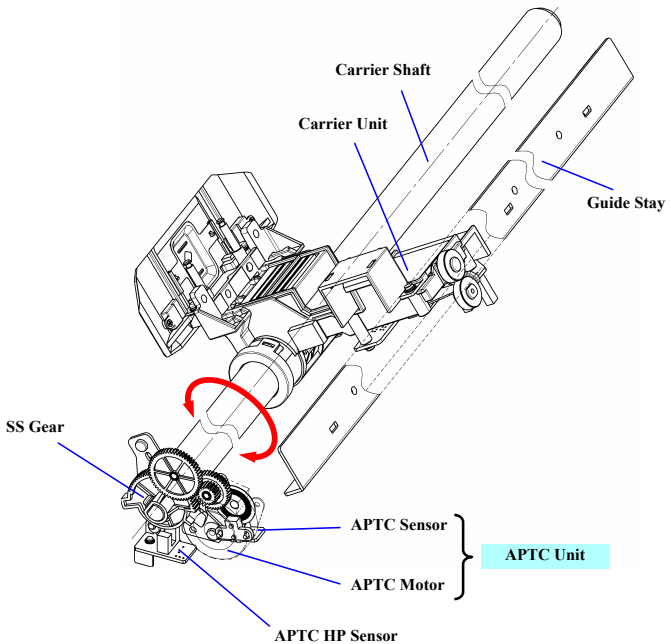

Figure 2-14. APTC mechanism

2.2.5.1 Head gap detection

The Figure 2-15 shows the components of the DFX-9000 platen-gap measurement. As illustrated, the platen-gap is divided into two sections: the Media-gap and the Paper thickness. Both of these gaps are calibrated in terms of APTC Motor drive steps.

The paper thickness is physically measured by the APTC mechanism. The media-gap is a calculated space using a predefined formula based on the paper thickness value.

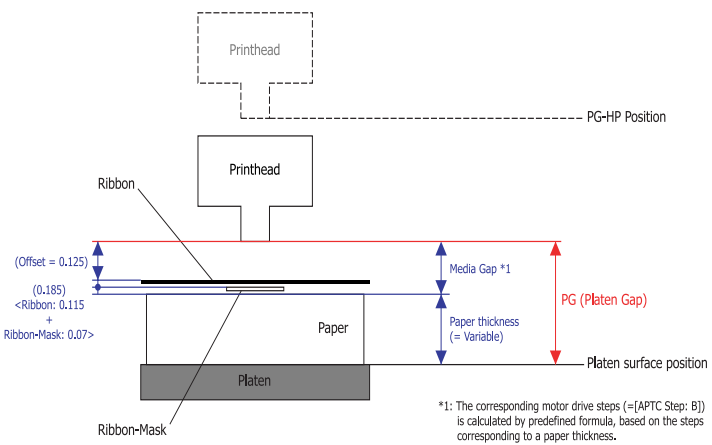

Figure 2-15. Platen gap components

Figure 2-16 shows how the printer measures the paper thickness with the APTC mechanism.

The printer counts the number of drive pulses applied to the APTC Motor while monitoring the width of (time between) the pulses output from the APTC Sensor-encoder. A change in encoder pulse width is interpreted as an increase of the APTC Motor load due to the printhead contacting the surface of the platen or paper.

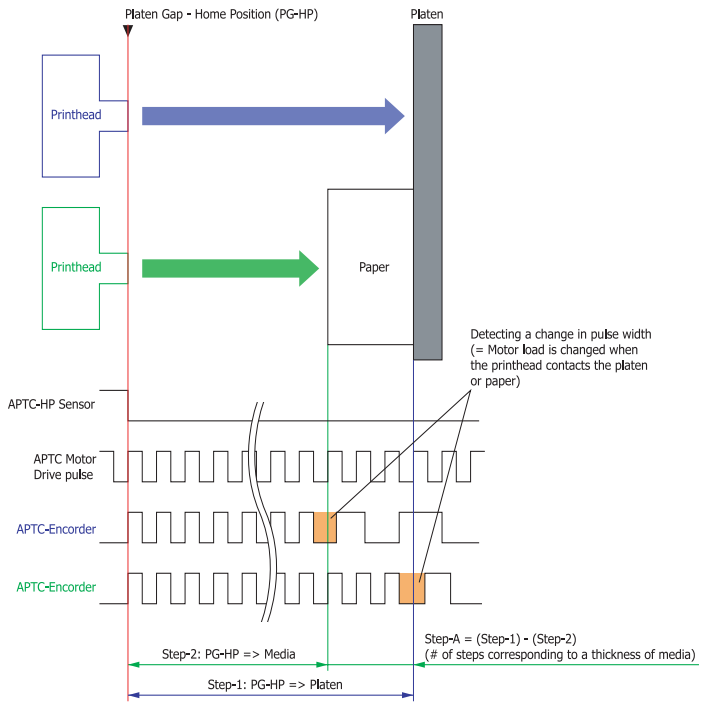

Figure 2-16. Paper thickness measurement process

Platen gap adjustment sequence

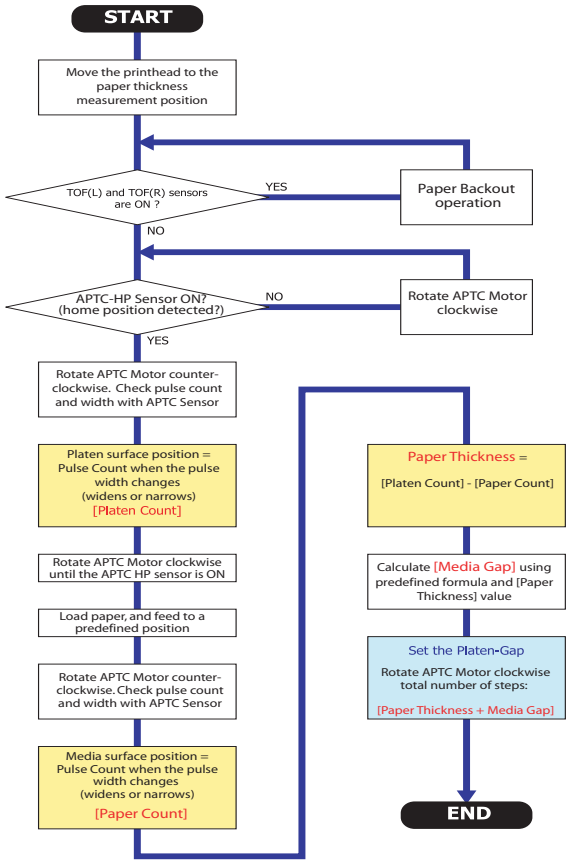

Figure 2-17. Platen gap adjustment process

The relationship between paper thickness and the platen gap is shown in the table below:

Table 2-4. Paper thickness and platen gap

Paper Thickness (mm)			PG (mm)	Panel Display	Print Pressure Level
Min.	Max	# of ply			
0.8 or less		1P	0.39	0	0
0.09	0.13	2P	0.44	1	0
0.14	0.18	3P	0.49	2	1
0.19	0.23	4P	0.54	3	1
0.24	0.28	5P	0.59	4	1
0.29	0.33	6P	0.64	5	1
0.34	0.38	7P	0.69	6	1
0.39	0.43	8P	0.74	7	2
0.44	0.48	9P	0.79	8	2
0.49	0.53	10P	0.81	9	2
0.54	0.58		0.89	10	2
0.59	0.63		0.94	11	2
0.64	0.68		0.99	12	2
0.69	0.73		1.04	13	2
0.74	0.79		1.09	14	2

2.2.5.2 Error detection

The only detectable error in the APTC mechanism is the APTC motor out-of-step error. The APTC motor error (Fatal error: APTC error) is detected when the home position (HP) cannot be detected by the APTC HP sensor during a home position seek.

2.2.6 Other mechanisms

2.2.6.1 Top cover open/close detection mechanism

When the top cover is opened, two switches open causing the SP motor and printing to stop. The Cover Open Switch assembly (CO SW ASY) and the Interlock Switch assembly (INLK SW ASY) are installed on the right side frame. When the top cover is closed, the two switches are closed and printing resumes.

CHECK POINT

The Interlock and Cover Open switches can be bypassed as explained in the table below if the unit is needs to be operated with the top cover or upper housing removed.

WARNING

Exercise extreme care when working on the unit with these safety switches bypassed. The SP motor is enabled, and the Carrier unit moves at very fast speed. If the Carrier unit strikes you at high speed, it could result in injury.

Table 2-5. Bypassing the Cover Open and Interlock switches

Switch	Bypass procedure
Interlock (INLK)	Short pins 1 and 4 of connector CNINLK on the ROM Board. See Figure 4-20 on page 146.
Cover Open (CO)	Short pins 1 and 2 of connector CNCOS on the Sensor Board. See Figure 4-23 on page 149.

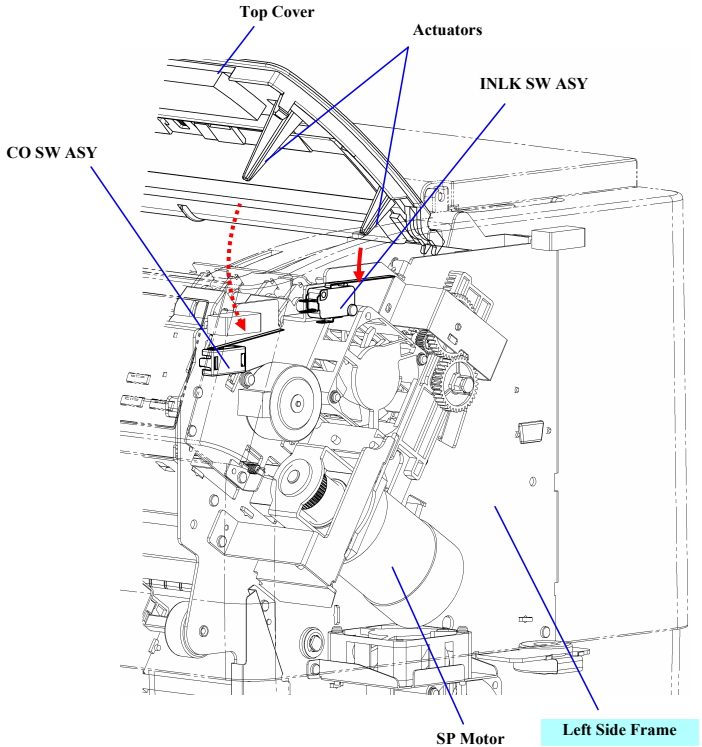

Figure 2-18. Top Cover Open/Close Detection Mechanism

2.2.6.2 Cooling fans

The four fans, 1 on the left side frame and 3 on the right side frame, prevent the inside temperature of the printer from rising too high.

Each of the fan motors has a rotation detection sensor that outputs a pulse signal. If a fan is not rotating, the output signal stops cycling, and the signal stays either High or Low. When the controller detects this condition, it shuts off the +42 V supply, and all fan motors and printing operations stop.

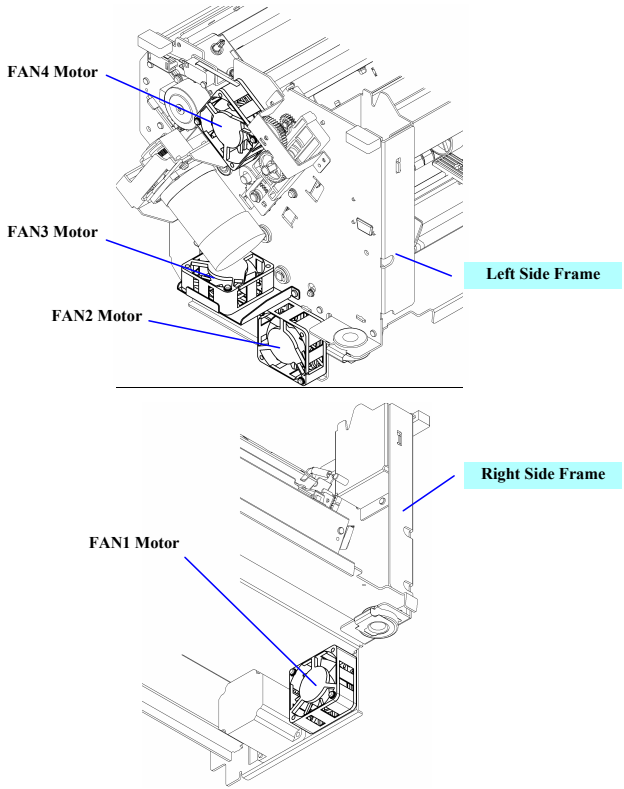

Figure 2-19. Cooling Fan

2.3 Circuit operation

The printer includes the following circuits.

Table 2-6. DFX-9000 Circuit Boards

Board	Function
ROM Board	■ Main control circuit ■ 3.3 V voltage generation/ retention circuit ■ Motor drive circuit ■ Head drive circuit ■ Interface circuit
OP Board	■ LCD display ■ LED display ■ Operator switches
Power Unit	■ +42 V, +37 V, and +5 V supply

The following diagrams show the basic PCB configuration and internal connections:

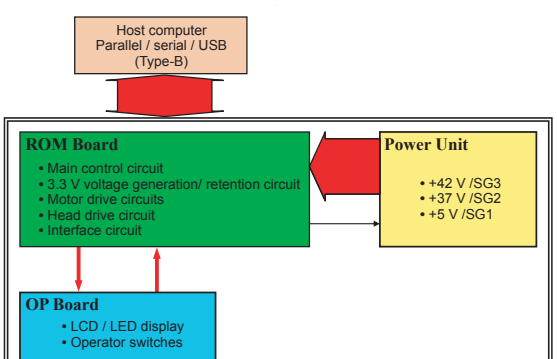

Figure 2-20. Basic Circuit Board Configuration

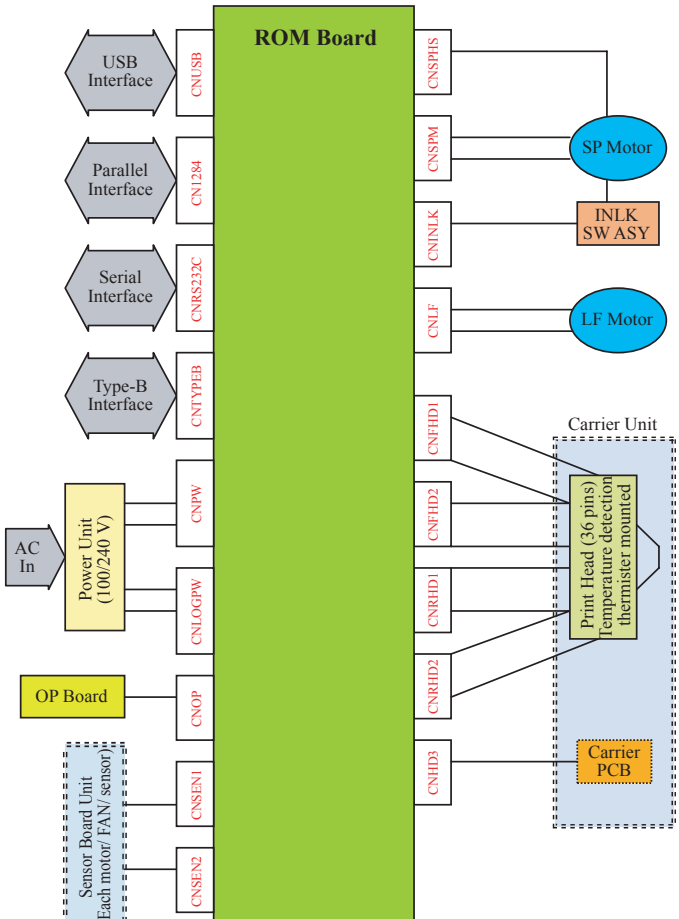

Figure 2-21. Internal Connection Diagram

2.3.1 ROM board

The ROM board is a main controller of this printer and is divided into the following two circuits:

- Logic Control circuit
- Mechanism Control circuit

2.3.1.1 Logic control circuits

The Logic Control circuit controls the following functions.

- I/O control (all I/F ports)
- Memory management
- Print data processing

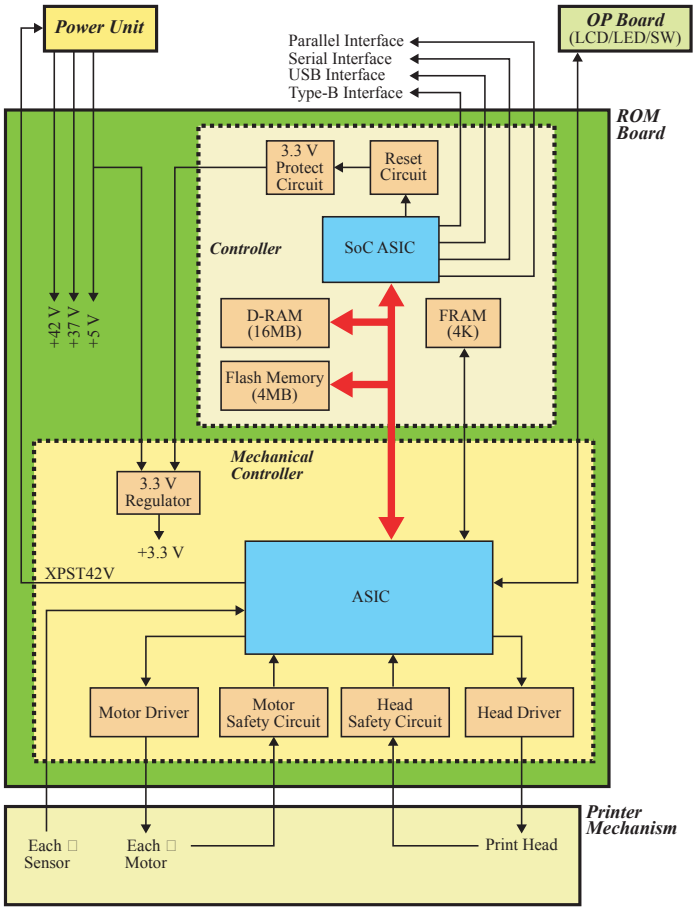

Figure 2-22. Circuit Block Diagram

Table 2-7. Major IC elements

Location	Name	Function (summary)
LSI1	SiX55513 (SoC ASIC)	ASIC coupled with CPU ■ Memory control ■ I/O Control (External I/F ports)
IC1	MBM29LV160	Flash memory (16 MB)
IC3	MSM51V18165F	D-RAM (16 MB)
IC9	74VHC161284MTD	IEEE-1284 Bi-directional communication control IC
IC11	MAX3243	Serial port driver IC
LSI2	MB87L5090	Mechanism Control ASIC (printer mechanism controller)
REG1	SI-3033C	3.3V on-board regulator
TA1 to TA9	SDH02	Head driver
HIC1	SLA7025	LF motor driver
HIC2, HIC3	A3953SLB	RF motor driver
TA10	STA485A	OC motor driver
TA11	STA485A	HCPP motor driver
TA12	STA485A	ATPC motor driver
IC18		SP motor driver

SoC ASIC

The SoC (System on Chip) ASIC is a one-chip custom gate array, consisting of a 32-bit RISC CPU, associated standard peripheral control circuits, and custom circuits specific to the control and operation of a dot-matrix printer.

The peripheral control circuits on the ASIC include a Bus control unit, a DMA controller, an Interrupt controller, a Timer, a Serial I/F, an A/D convertor, and 8 KB of RAM.

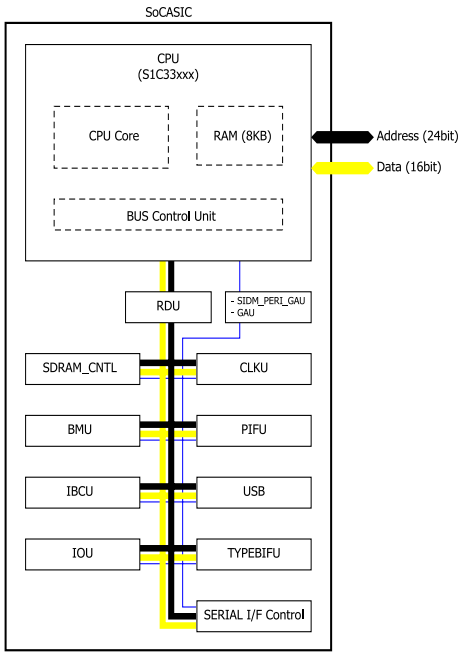

Figure 2-23. SoC ASIC internal block diagram

The table below shows the dot-matrix-printer-specific circuit modules on the SoC ASIC

Table 2-8. SoC ASIC functional modules

Module	Description
SIDM_PERI_GAU	Gate-array decode unit. This module generates a Chip-Enable signal to select each functional module of the ASIC.
RDU	Data-bus control module (to CPU core)
CLKU	System clock control unit. This module controls the clock used by each module of the ASIC.
SDRAM_CNTL	External SDRAM control unit. (R/W, Auto-refresh, Initialize)
BMU	Bit Manipulation unit. This module processes the print data and modifies it for specific printing modes (enlarge, Italicize, Super/Sub-Script conversion, etc.)
IOU	I/O Control Unit.
IBCU	The Input Buffer Control unit controls the input buffer pointer address (R/W) and the buffer size.
USB	USB I/F (1.1/Full speed device compliant) Control unit.
PIFU	IEEE 1284 Parallel I/F Control unit.
TYPEBIFU	Type-B I/F port control unit.

Table 2-8. SoC ASIC functional modules (continued)

Module	Description
TIMER_PRES	8-bit timer pre-scaler. (used for generating a reference clock for the serial communication speed control (Baud-rate).)
SCH0TIMER	8-bit timer for Channel 0. (for generating a reference clock (Baud-rate).)
SCH1TIMER	Same as above (for Channel 1).

Memory circuit control

As shown in the figure below, the memory circuit consists of three memory devices: Flash memory, D-RAM, and F-RAM. Brief descriptions for each memory device are given below.

Flash memory

16 Mbit of Flash memory are used to store the control program (firmware) and character generator data.

D-RAM

16 Mbit of DRAM are used as the work area for data processing and print image data generation.

F-RAM

4 Kbit of F-RAM are used to store mechanical adjustment parameters and operational history information (error log, print operation log, etc.) The CPU communicates with this chip through a two-line serial interface (Data signal, Clock signal).

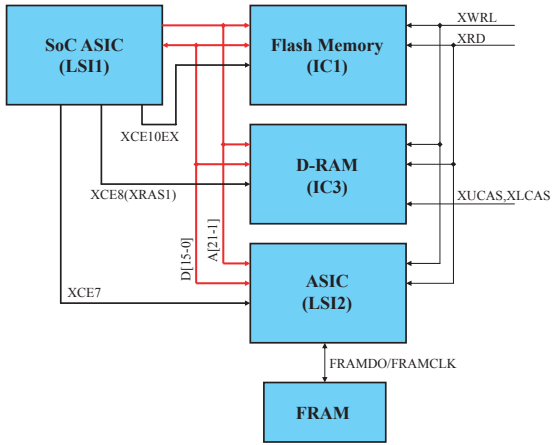

Figure 2-24. Memory control circuit block diagram

2.3.1.2 Mechanism control circuit

The Mechanism Control circuit is managed by the Mechanism Control ASIC, and the figure below is the internal block diagram of this ASIC.

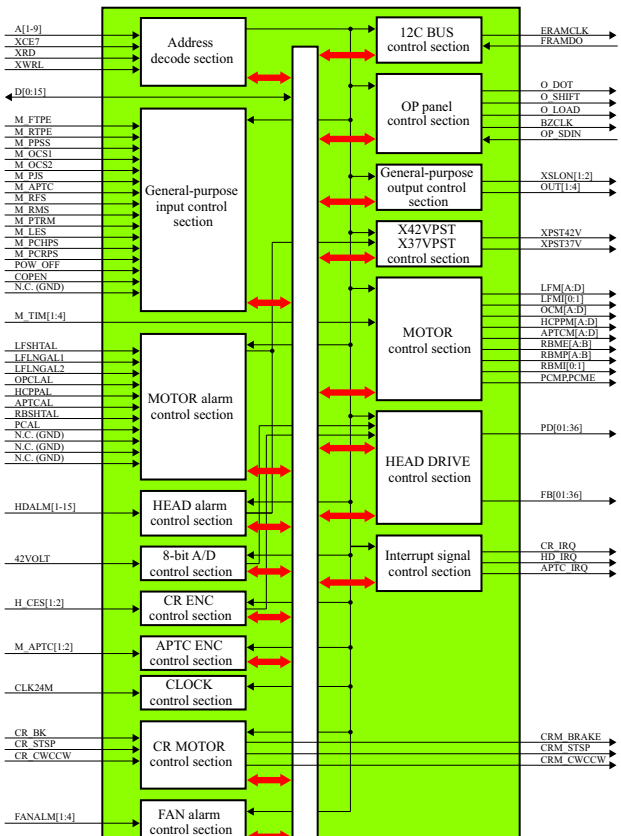

Figure 2-25. Mechanism control ASIC block diagram

Motor Drive control circuits

This printer has six circuits for driving the six motors: SP (Space or CR) motor, LF (Line Feed) motor, RF (Ribbon Feed) motor, HCPP (Host-Controlled Paper Path) motor, APTC (Automatic Paper Thickness Control) motor, and OC (Open/Close) motor. There is also a control system for the optional Perforation cutter unit. The ASIC controls the motors. Motor timing signals are generated by the timer output from the SoC ASIC. The following shows a block diagram of the motor control section.

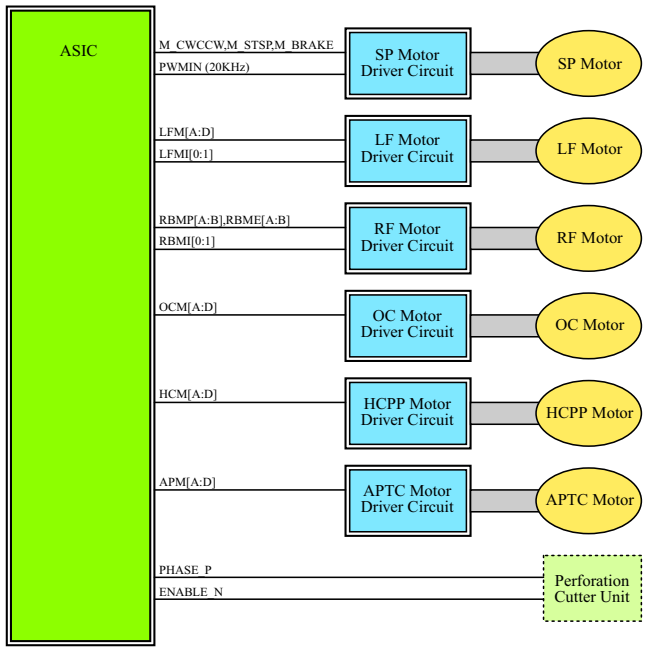

Figure 2-26. Motor control block diagram

SP Motor drive circuit

The SP motor is a DC brushless motor. A dedicated brushless motor control IC is used to control the speed and position. The position of the SP motor is controlled using encoder pulse counts, and the speed is controlled using Proportional, Integral, Derivative (PID) and closed-loop control. The following shows a detailed block diagram and timing chart of the SP motor drive circuit.

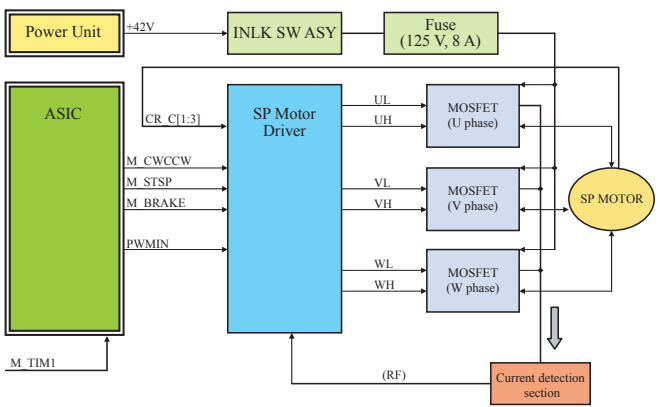

Figure 2-27. SP motor drive circuit block diagram

SP motor control signal definitions

- CR_C[1:3] is a Hall-effect sensor input signal. When the motor is in an IN+ > IN- state, the signal is high, and the reverse state is low.
- M_CWCCW is a normal/reverse rotation input signal that determines the direction of the Carrier unit.
- M_STSP is a start/stop control signal. When the signal is low, the motor starts driving. When the signal is high, the motor stops driving.
- M_BRAKE is a brake input signal. When the signal is low, the motor is braked. When the signal is high, the motor rotates normally.
- PWMIN is a pulse input signal (M_TIM1), and its output is controlled based on the duty levels. When the signal input is low, the pulse output turns “ON”. When the input is high, the pulse output turns “OFF”.
- UH, UV, UW are PWM output signals that are controlled based on the duty levels. UH, UV, UW are normally controlled in a saturated state.
- RF is an output current detection terminal. The output current is determined according to the detected resistance (Iout=0.5/Rf).
- PWM frequency is determined according to the capacity of an external capacitor. It is set to approximately 20 kHz. The frequency can be determined by calculation using Fpwm=1/(45000*C).

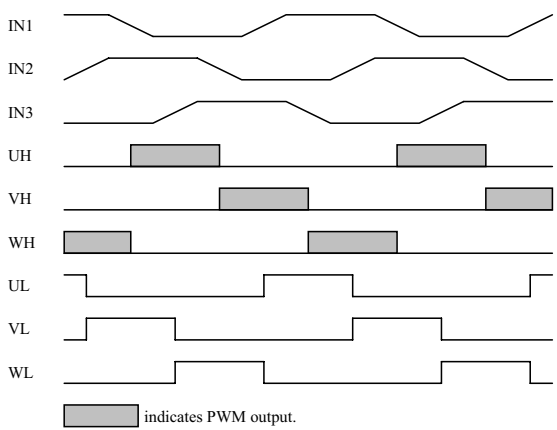

Figure 2-28. Timing Chart

LF Motor drive circuit

The LF Motor is a HB stepping motor. A dedicated unipolar drive control device for a 2-phase stepping motor uses paper sensor pulse counts for position control. The speed is controlled using excited-cycle and open-loop control. Figure 2-29 shows a circuit block diagram of the LF motor.

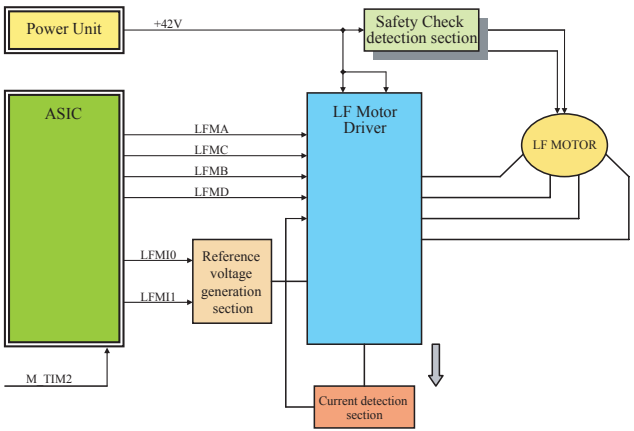

Figure 2-29. LF Motor Drive Circuit Block Diagram

The input of an excited cycle output (M_TIM2) from the SoC ASIC to the Mechanism Control ASIC provides automatic phase-switching control. The phase data signal LFM [A:D] is output from the MOTOR control section of the Mechanism Control ASIC, and the internal FET of the LF motor driver turns ON when the output is “High-Z”, causing current to be applied to the motor. The motor current passes through the resistance detection section. At the same time, the voltage applied to the detection section is compared with the voltage generated in the reference voltage section of the LF motor driver internal circuit. If the applied voltage exceeds the reference voltage, a logic operation AND is performed between the LF motor driver internal comparing circuit and the phase data signal to turn the internal FET OFF, keeping the output current constant. The reference voltage generation section contains a voltage divider with 4 resistances, and controls output current values for acceleration, deceleration, constant speed, and stop.

RF Motor drive circuit

The RF motor is a permanent magnet (PM) stepping motor. A dedicated unipolar drive control device for a 2-phase stepping motor controls the position using paper sensor pulse counts. The speed is controlled using excited-cycle and open-loop control. The following shows a detail block diagram of the RF motor.

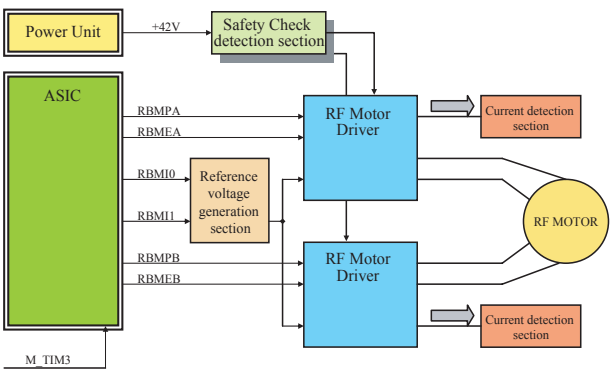

Figure 2-30. RF Motor Drive Circuit Block Diagram

The input of an excited cycle output (M_TIM3) from the SoC ASIC to the Mechanism Control ASIC provides automatic phase-switching control. A PHASE and ENABLE signal are output from the MOTOR control section of the Mechanism Control ASIC. The PHASE signal switches, and the current load direction is determined, when the ENABLE input is “L” and the BRAKE input is “H”. A built-in pre-set OFF-time PMW current control circuit ensures the load current is limited to its set value. The limit value is set by the resistance value of the current detection circuitry and the voltage output from the reference voltage generation section. The reference voltage generation section contains a voltage divider with 4 resistances, and controls output current values for acceleration, deceleration, constant speed, and stop.

HCPP Motor, APTC Motor, and OC Motor Drive Circuits

The HCPP motor, APTC motor, and OC motor are PM stepping motors. The position control of these motors is achieved using paper sensor pulse counts, and speed is controlled using excited cycle and open-loop controls. A general-purpose transistor array provides the control logic. The three motors are constant-voltage motors and their drive circuits have identical configuration. The following figure shows a block diagram of HCPP motor as an example.

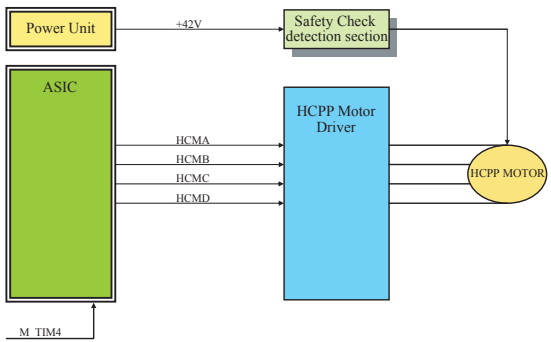

Figure 2-31. HCPP Motor Drive Circuit Block Diagram

The input of an excited-cycle output (M_TIM4) from the SoC ASIC to the Mechanism Control ASIC provides automatic phase-switching control. The phase data signal HCM [A:D] is output from the MOTOR control section of the Mechanism Control ASIC, and an internal transistor on the HCPP motor driver turns ON when the output is “High-Z”, causing current to be applied to the motor. Since the drive circuit is a constant-voltage drive circuit, only the switching timing is controlled by the Mechanism Control ASIC. For the same reason, the current value for a single phase depends on the motor winding resistance specification. The HCPP motor driver is a NPN type Darlington transistor with a built-in avalanche diode.

Perforation Cutter Drive Circuit

The Perforation cutter motor is controlled by the output of the PHASE and ENABLE signals from the Mechanism Control ASIC. The following figure shows a detail block diagram of the Perforation cutter drive circuit.

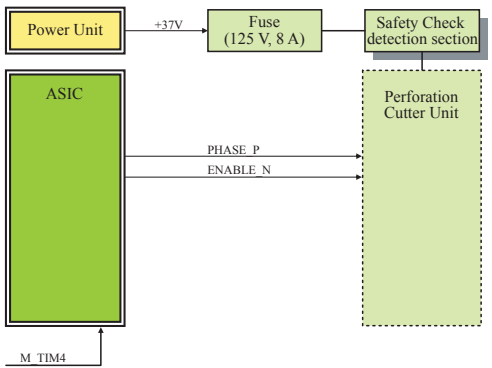

Figure 2-32. Perforation Cutter Drive Circuit Block Diagram

CUT/ON (ENABLE)	CUT DIR (PHASE)	Motor		Remark
		MTR A	MTR B	
H	-	-	-	Sleep Mode
L	L	L	H	Normal rotation
L	H	H	L	Reverse rotation

Motor Malfunction Detection

Each motor drive circuit is equipped with the overcurrent detection function.

- SP motor, Perforation cutter motor

  When the set current value is exceeded, the power line is shut off by the fuse.

- LF motor, RF motor, HCPP motor, and APTC motor

  When an abnormal current that exceeds the prescribed level is detected, the status is sent to the Mechanism Control ASIC. If the Mechanism Control ASIC detects that the status has continued for a certain period of time, the 42 V / 37 V line for the ROM board is cut off by turning the X42VPST signal to LOW. The firmware recognizes this state when it performs a Read operation on the Mechanism Control ASIC internal register.

Printhead Control Circuit

The following shows a block diagram of the printhead control circuit.

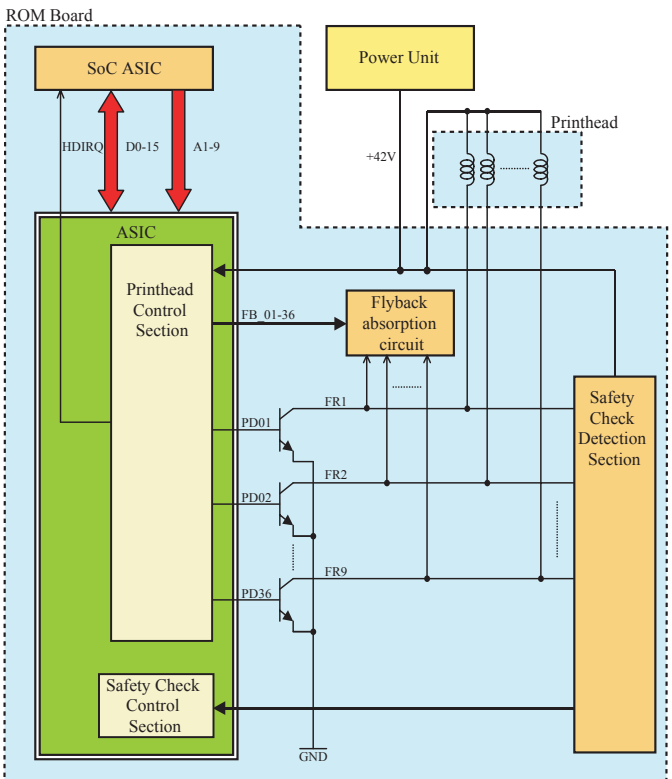

Figure 2-33. Printhead Control Block Diagram

Printhead control

The printhead control circuitry includes the print data extraction section, main excitation / flyback time selection section, print trigger generation section, and the print timing control section. The timing control of the printhead pins are based on:

1. The print data and density sent from the SoC ASIC, and
2. The 42 V voltage and CR encoder pulse input sent to the Mechanism Control ASIC.

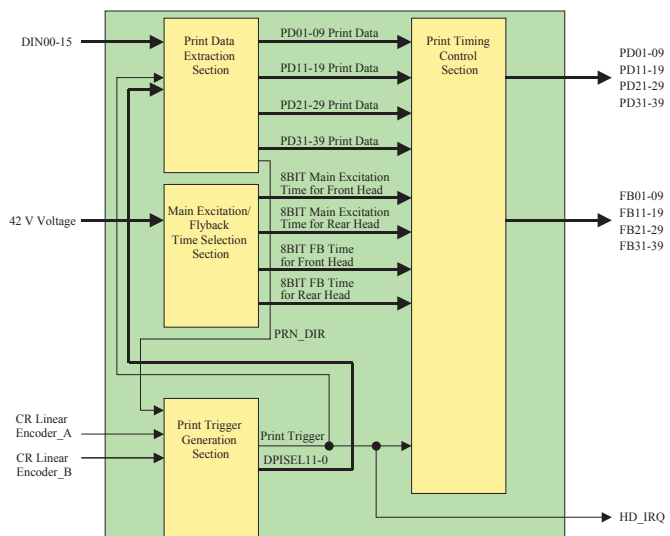

Figure 2-34. Printhead Control Block Diagram

Main excitation / flyback time selection circuitry

This section utilizes an 8-bit Analog/Digital converter to monitor the head drive voltage (42 V), the 16-byte front main excitation time table, front flyback time table, and rear flyback time table. The values in the tables are changed by the firmware on a line-by-line basis according to the temperature of the printhead. A best control time is selected and sent to the print timing control section according to the print job.

Print trigger generation

The trigger pulses are generated based on the linear encoder pulse input for SP motor control and the density value predetermined by the firmware. The following shows the print trigger generation timing.

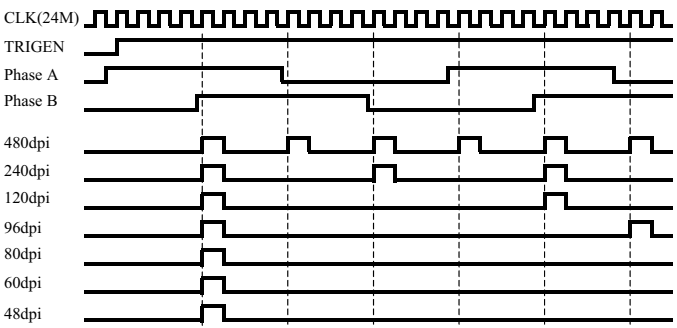

Figure 2-35. Print trigger generation timing

Since the CR encoder resolution is 1/120 inch, some print densities do not match the resolution of the CR encoder input. In those cases, the print timing is calculated based on the last CR encoder cycle. The print density supports 480, 360, 240, 180, 144, 2880/21, 120, 96, 90, 80, 72, and 60 dpi.

Printhead timing control

After the required offset time is set on a print trigger basis, the main and flyback pulses are generated based on the input from the main excitation/ flyback time selection circuit and print trigger generation circuit. The head control timing is shown below.

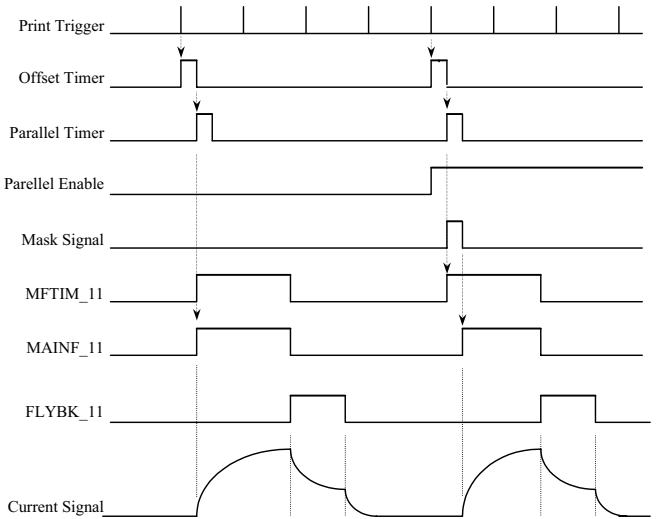

Figure 2-36. Head control timing

The offset time is the sum of the following four offset values.

Offset time = Speed offset + FR offset + constant offset + flight time offset

- Speed offset
  Offset value to correct for CR speed differences.
- Front/Rear (FR) offset
  Offset value to correct for the flight time difference between the front head and rear head.
- Constant offset
  Offset value to correct for the difference between the pin pitch and print density.
- Flight time offset
  Offset value to correct for the individual flight time for each pin.

In addition, a parallel timer is used to reduce the conducting time to even out the impact of one pin when that pin is used repeatedly in a job. If an operation of the pin is detected in the previous print cycle, the “parallel enable” and the mask signal are activated to reduce the main excitation time. The Mechanism Control ASIC then outputs a main excitation control signal (MAINF_xx) and flyback signal (FLYBK_xx) to activate the transistor to control the printhead.

Head abnormal current detection circuit

When an abnormal current exceeding the prescribed level is detected, the status is sent to the Mechanism Control ASIC. If the Mechanism Control ASIC internal circuit detects that the status has continued for a certain period of time, the 42 V/37 V line for the ROM board is cut off by turning the X42VPST signal off (low). The firmware recognizes this state when it performs a Read operation on the Mechanism Control ASIC internal register.

2.3.2 OP board

The LCD, LED and operation buttons are mounted on the OP (Operator Panel) board. They are controlled by a dedicated LSI device. The OP Panel Control LSI and communicates with the Mechanism Control ASIC on the ROM Board by serial data transmission.

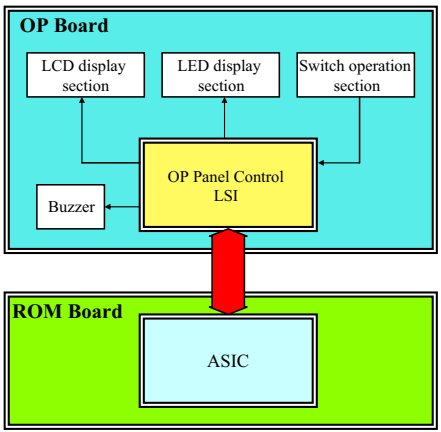

Figure 2-37. OP Board control block diagram

2.3.3 Power supply circuit

The power supply circuit consists of the following sections.

- Input noise filter
- Inrush control / rectifier smoothing circuit
- PFC smoothing
- +5 V RCC converter
- +42 V FCC converter
- +37 V step-down chopper

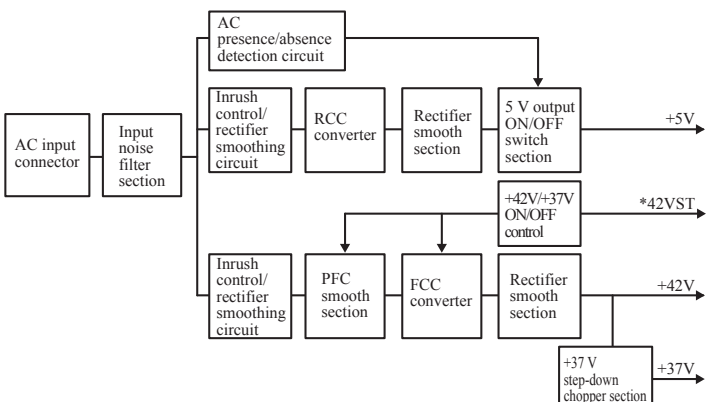

Figure 2-38. Power Supply Circuit Block Diagram

The PFC, +5 V, +42 V, and +37 V circuit sections are described below.

- PFC smoothing
  This section is a power-factor improvement circuit that controls high-frequency current.
- +5V converter section
  This section consists of a ringing choke converter and has the following functions.
  - Overcurrent control
    If the +5 V load somehow becomes shorted, the +5 V output is drooped automatically to prevent the power supply from being damaged.
  - Overvoltage control
    If an overvoltage occurs on the +5 V output due to a malfunction of the converter, the status is detected in the overvoltage detection section and the +5 V output is shut off.
  - +5 V ON/OFF switch section
    This section executes the sequence that cuts off the 5 V first during power-down (at AC OFF) by detecting a signal from the AC presence/absence detection circuit.
- +42V converter section
  This section consists of a forward choke converter (FCC) that uses a switching control IC and has the following functions.
  - +42 V/ +37 V ON/OFF control
    The +42/+37 V circuit ON/OFF is controlled using the *42VST signal. The +42/+37 V is ON when *42VST is low, and shuts off when *42VST is high.
  - Overcurrent control
    If the +42 V load somehow becomes shorted, the +42 V output is drooped to prevent the power supply from being damaged.
  - Overvoltage control
    If an overvoltage occurs on the +42 V output due to a malfunction of the converter, the status is detected in the overvoltage detection section, and the +42 V output is shut off.
- +37 V step-down chopper section
  This section consists of a step-down chopper circuit based on the +42 V output and has the following functions.

- Overcurrent control
  If the +37 V load somehow becomes shorted, the +37 V output is drooped automatically to prevent the power supply from being damaged.
- Overvoltage control
  If an overvoltage occurs on the +37 V output due to a malfunction of the converter, the status is detected in the overvoltage detection section, and the +37 V output is shut off

3.3 V Residual Current Circuit

This printer has a circuit that retains 3.3 V for a certain period of time after the power is off. When the 5 V output has decreased and falls below the prescribed level after the power has been switched off, this circuit switches the voltage to a charged electric double layer condenser. At the same time, the circuit extends the 3.3 V output time by switching the input voltage for the regulator section where 3.3 V has been generated, providing a minimum of 50 ms of time to allow data writing for FRAM and the XOFF response of the serial interface. The following shows a block diagram of the voltage retaining circuit.

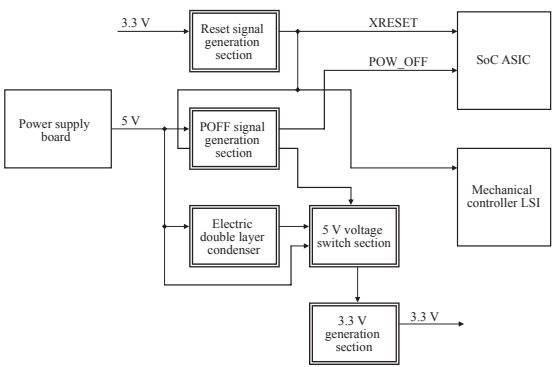

Figure 2-39. 3.3v Retaining Circuit Block Diagram

The voltage switching timing is shown below.

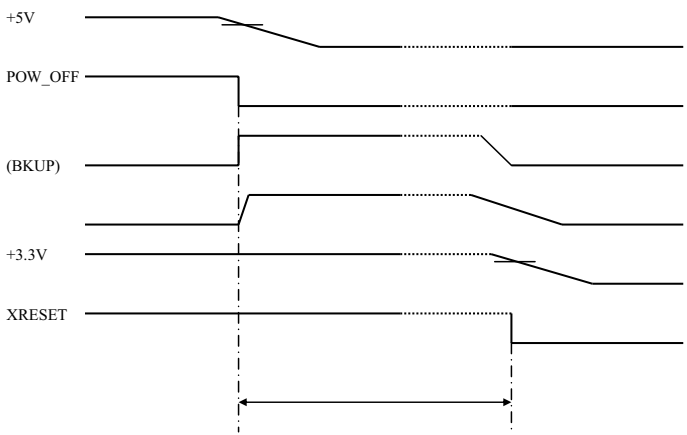

Figure 2-40. Voltage Switching Timing

CHAPTER

3

TROUBLESHOOTING

3.1 Overview

The printer may exhibit different symptoms for the same problem, which makes troubleshooting more difficult. This section, however, provides simple and effective ways to facilitate troubleshooting.

In addition, the User's Manual for the EPSON DFX-9000 describes detailed steps to be taken for recovery from typical user errors.

WARNING

- Before you disassemble the printer, disconnect the power cable and data interface cable.
- Allow sufficient time for the motors to cool before touching them. Some of them get hot enough to burn you.

CAUTION

- Use only specified tools to avoid impairing the quality of the printer.
- When troubleshooting motors, always check the driver circuit as well, and vice-versa. A malfunction in one of these components can cause the other to fail - and will cause the replacement part to fail as well. ***Always check both the motor and driver.***
- Use only specified lubricants and adhesives.
- Carry out any necessary adjustments by following the specified procedure.
- Wear a grounded wrist strap to discharge static electricity from your body.

3.1.1 Troubleshooting procedure

Perform troubleshooting work according to the flowchart shown below.

CAUTION

Before starting disassembly and assembly work, read and understand thoroughly the contents of 3.1.2 Preliminary checks (p.95).

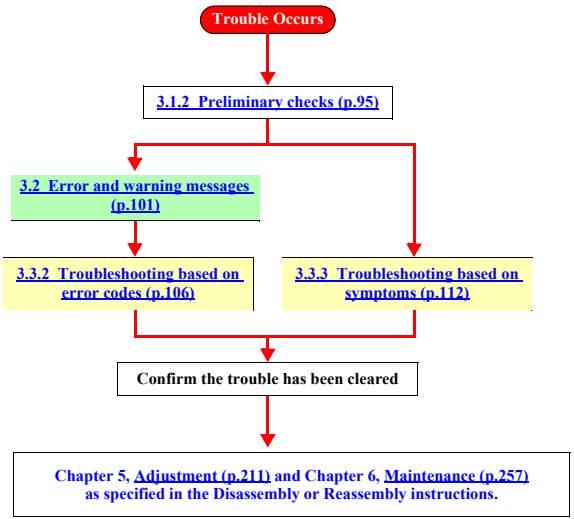

Figure 3-1. Troubleshooting process flowchart

3.1.2 Preliminary checks

Before starting troubleshooting, be sure to verify that the following conditions are all met:

1. Verify that the wall socket supplies clean AC current that matches the voltage rating on the printer. Measure the voltage at the wall socket.
2. The POWER CORD must be free from physical damage, short circuit, wire breaks, or miswiring.
3. The printer must be grounded properly.
4. The printer should not be located where it is exposed to temperature or humidity extremes, or abrupt temperature change. See Chapter 1 for Operating environment conditions (p.12).
5. The printer should not be located near water, humidifiers, heaters, or flames. Keep the printer free from exposure to dust and the direct output from an air conditioner.
6. The printer should not be located in a place where volatile or inflammable gases are produced.
7. The printer should not be located in a place where it can be exposed to direct sunlight.
8. The printer must be located in a well-ventilated place.
9. The printer must be placed on a strong, steady, and level (less than 5° inclination) surface.
10. The paper used must conform to the specifications listed in Chapter 1.
11. There must be no abuse or mishandling of the printer.
12. The Periodic Maintenance Parts must be replaced on schedule. See Chapter 6, Maintenance (p.257).
13. If you cannot print data from the host computer, initiate the printer's self test and check for problems with the output. Check the Default Settings printed on the Self Test for any incorrect settings. Refer to Chapter 1, Self test (p.50).
14. Check the printer inside and out for dirt, obstructions or physical damage.
15. Make certain that all cable connectors are connected properly.
16. Confirm that all gears are engaged properly and are not exhibiting excess wear or other signs of friction or misalignment.
17. Make certain that the rollers inside the printer are free from contamination, label remnants or other debris, and scratches.
18. Reset the EEPROM to the factory default settings, if necessary. Refer to Chapter 1, Clear EEPROM (p.51).

3.1.3 Power-on initialization sequence

Main

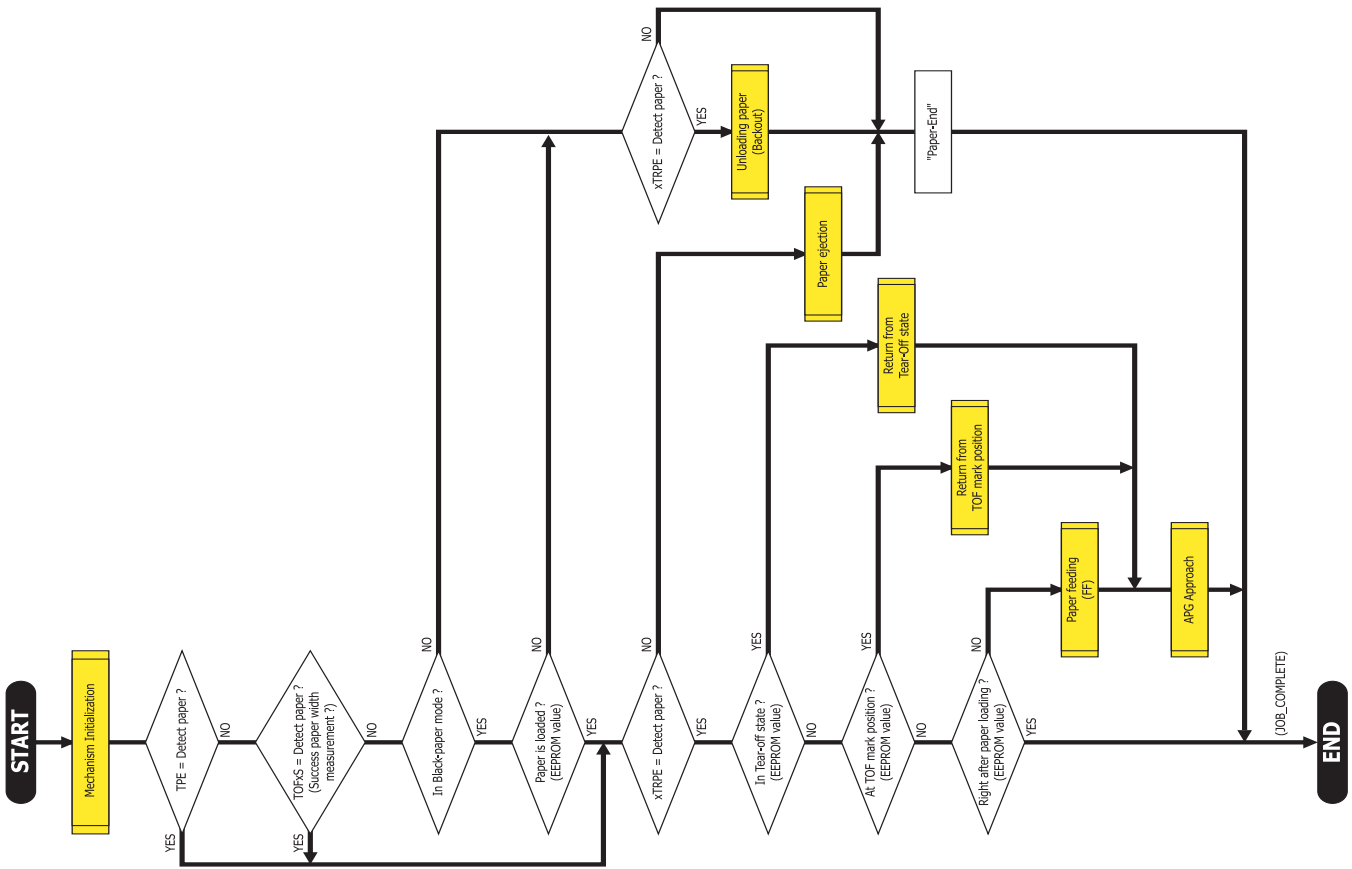

Mechanism initialization

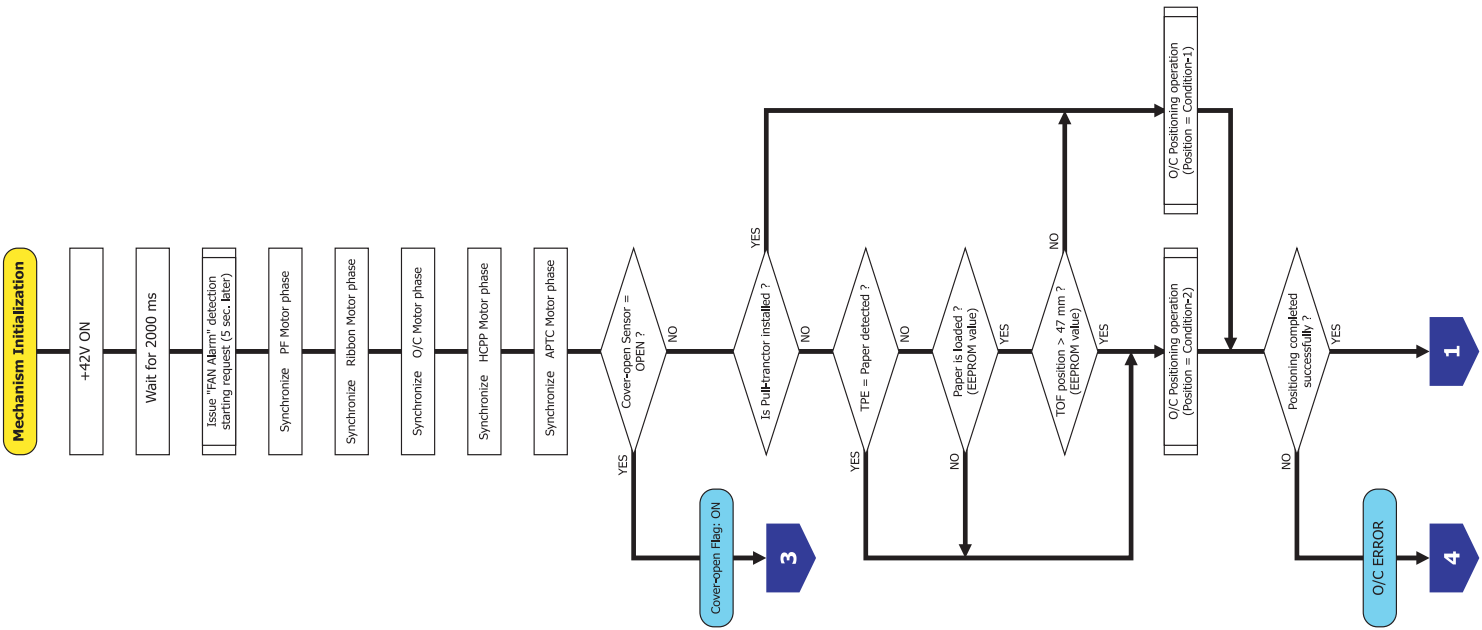

Mechanism initialization, continued

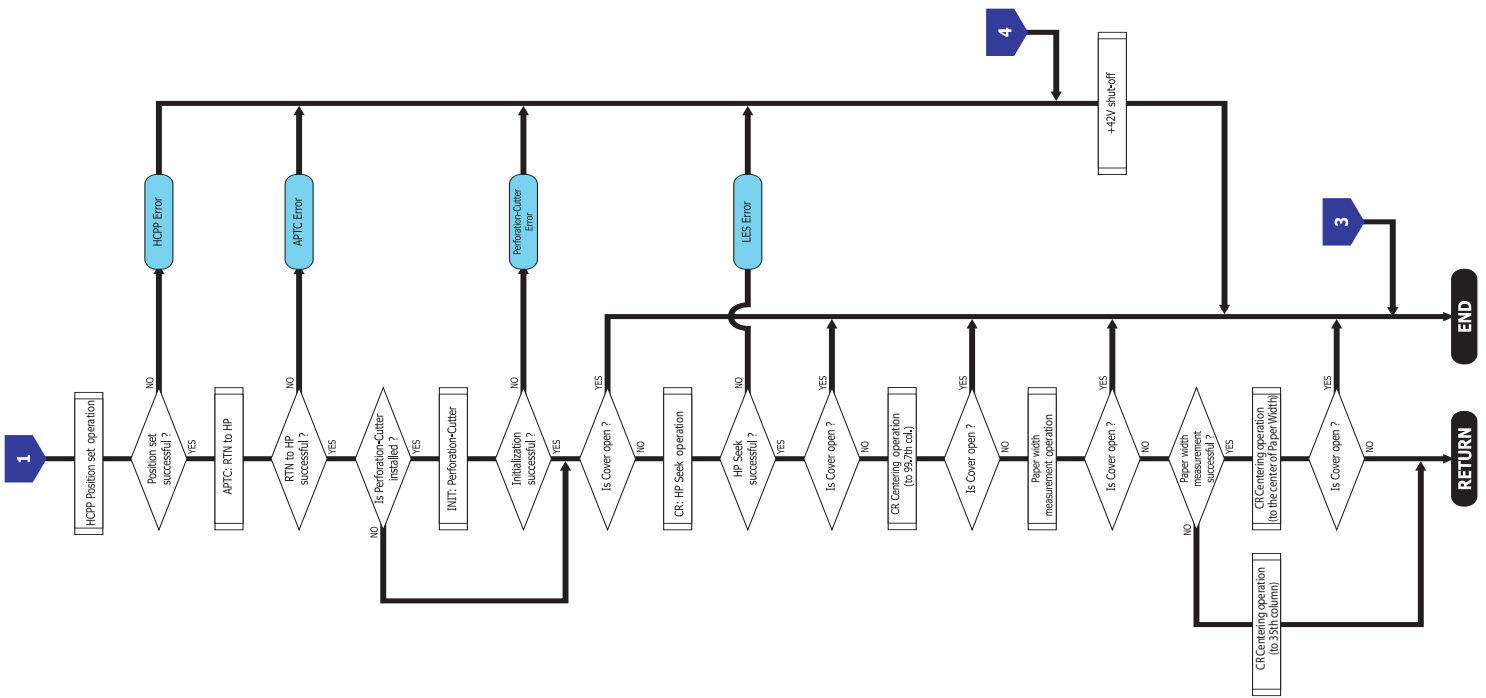

Paper Backout

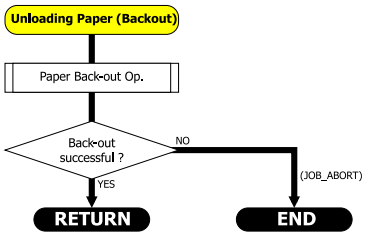

Paper Ejection

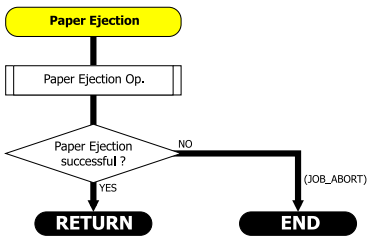

RTN from Tear-Off state

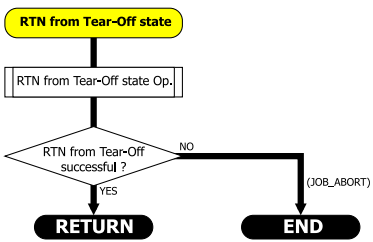

RTN from TOF Mark Position

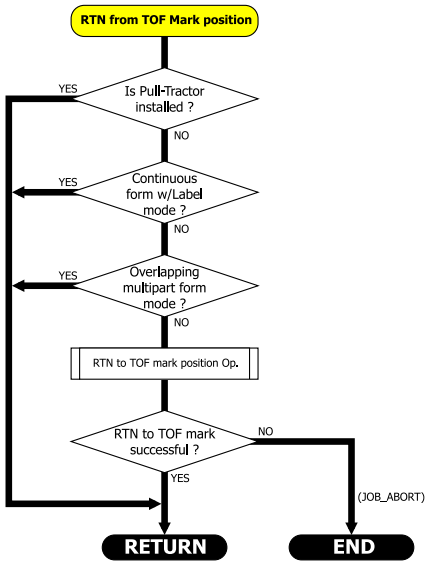

PAPER FEEDING (FF)

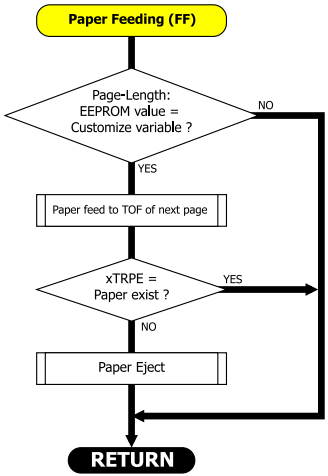

APG APPROACH

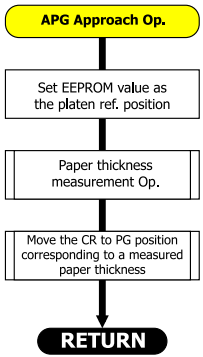

3.2 Error and warning messages

Table 3-1. List of General Error

Beeper sounds (see below)	LCD Message	LED						Status	Remedy
		Pause	Paper Out	Tear Off	Top of Form	Front	Rear		
_	Print head hot Please wait	Blink	-	-	-	-	-	Head hot warning. The temperature of the head thermistor is above the allowed limit.	Wait for the temperature of the head thermistor to fall below the upper limit.
• • •	Error: Switching not completed	On	-	-	-	-	-	The printer fails to completely change the paper path.	Tear off the paper at the top cover, and press the Pause or Front/Rear button.
• • •	Error: No paper loaded	On	On	-	-	-	-	Paper out error - loading. Continuous paper is not fed to the standby position.	Tear off the page at the perforation; then press the LF/FF Load button. The printer feeds the paper to the standby position.
• • •	Error: Paper out	On	On	-	-	-	-	Paper out error - No paper is loaded on the selected tractor.	Load paper on the selected tractor, or select a different tractor by pressing the Front/Rear button. Remove your paper and reload it correctly.
• • •	Error: Ribbon out	On	-	-	-	-	-	Ink ribbon out error: The ribbon is not installed.	Install or reinstall the ribbon cartridge, and press the Pause button.
• • •	Error: Ribbon jam	On	-	-	-	-	-	Ribbon jam error: The ribbon has jammed.	Remove and re-install, or replace, the ribbon cartridge.
• • •	Error: Paper jam	On	Blink	-	-	-	-	Paper jam error: Paper is jammed in the printer.	Clear the paper jam.

Table 3-1. List of General Error

Beeper sounds (see below)	LCD Message	LED						Status	Remedy
		Pause	Paper Out	Tear Off	Top of Form	Front	Rear		
• • •	Error: Cover open	On	-	-	-	-	-	Cover open error: The printer top cover is open.	Close the top cover.
– – – – –	Fatal Error: xx Turn off printer	Blink	Blink	Blink	Blink	Blink	Blink	Fatal error: The printer will not recover from the error, even after turning the power back on.	Refer to 3.3.2 Troubleshooting based on error codes (p.106).

NOTE: The description "•" and "–" in the above shows how the beeper sounds.
• Rapid Beep: Beeper sounds approximately 100 ms at an interval of 100 ms.
– Long Beep: Beeper sounds approximately 500 ms at an interval of 100 ms.

3.2.1 Fatal errors

3.2.1.1 List of fatal errors

Table 3-2. List of Fatal Errors

Fatal Error Code	Description	Reference
01	LES Error	Page 106
02	CR Driver Error	Page 106
03	CR Horizontal Position Error	Page 106
04	PF Driver Error	Page 107
05	CR Error	Page 107
06	High Volt Error	Page 107
07	Low Volt Error	Page 107
08	Over Load Error	Page 107
09	FAN1 Driver Error	Page 108
0A	FAN2 Driver Error	Page 108
0B	FAN3 Driver Error	Page 108
0C	FAN4 Driver Error	Page 108
0D	No Head Error	Page 108
0E	Head Driver Error	Page 108
0F	APTC Error	Page 109
11	Ribbon Feed Driver Error	Page 109
12	Ribbon Jam Error	Page 109
13	HCPP Driver Error	Page 110
14	HCPP Error	Page 110
15	OC Driver Error	Page 110
16	OC Error	Page 110
17	PC Driver Error	Page 111
18	PC Error	Page 111
30	CG Error	Page 111
31	EEPROM Compare Error	Page 111

Note: Error codes 00, 10, and 19 ~ 29 are not supported

3.2.1.2 Fatal error log

Use the adjustment program to retrieve the error log information stored in non-volatile memory on the main board. Refer to Chapter 5, Adjustment, Troubleshooting fatal errors (p.255).

To access the printer with the Adjustment Program while in a fatal error state:

1. Turn off the printer
2. Turn it on again while holding down the panel buttons **[Front/Rear] + [Font] + [Pitch]**

This places the printer in Error Analyzing Mode.

3.3 Troubleshooting

3.3.1 Test reference values

3.3.1.1 Motor test reference

The table below lists the resistance values for the motors on the printer.

Table 3-3. Motor resistance values

Motor	Coil resistance
SP MOTOR	0.88 ~ 1.08 ohm
LF MOTOR	0.5 ~ 0.6 ohm
O/C MOTOR	72 ~ 88 ohm
HCPP Motor	145 ~ 165 ohm
RF Motor	13.5 ~ 16.5 ohm
APTC Motor	365 ~ 446 ohm

3.3.1.2 Sensor and switch reference

Table 3-4. Sensors and switches test reference

Sensor	Type	Logical state
FTRPE	Photo-interrupt	Low = paper present
RTRPE	Photo-interrupt	Low = paper present
OCS1 / OCS2	Photo-interrupt	Low = closed
TPE	Photo-reflective	High = paper present
COS	Microswitch	Low = cover closed
INLK SW	Microswitch	Low = cover closed
LES	Photo-interrupt	Low = home position
APTCHP	Photo-interrupt	Low = home position
TOFL	Photo-reflective	High = paper present
TOFR	Photo-reflective	High = paper present
RFS	Photo-interrupt	L-H-L, etc. = ribbon feeding (spindle rotating)
RMS	Microswitch	Low = ribbon installed
PTRM	Microswitch	Low - tractor unit installed

3.3.1.3 Printhead coil resistance values

Head coil resistance is 4.1 ~ 4.9 ohm at 20 °C.

Table 3-5. Printhead - Contact pin assignment

Contact (lead) number	Front PCB side A	Front PCB side B	Rear PCB side A	Rear PCB side B
1	SEN1	---	---	SEN2
2	R-7 pin	L-7 pin	R-7 pin	L-7 pin
3	R-5 pin	l-5 pin	R-5 pin	L-5 pin
4	R-3 pin	L-3 in	R-3 pin	L-3 pin
5	R-1 pin	L-1 pin	R-1 pin	L-1 pin
6	R-9 pin	L-9 pin	R-9 pin	L-9 pin
7	+ 42 V	+ 42 V	+ 42 V	+ 42 V
8	+ 42 V	+ 42 V	+ 42 V	+ 42 V
9	+ 42 V	+ 42 V	+ 42 V	+ 42 V
10	+ 42 V	+ 42 V	+ 42 V	+ 42 V
11	+ 42 V	+ 42 V	+ 42 V	+ 42 V
12	+ 42 V	+ 42 V	+ 42 V	+ 42 V
13	+ 42 V	+ 42 V	+ 42 V	+ 42 V
14	+ 42 V	+ 42 V	+ 42 V	+ 42 V
15	+ 42 V	+ 42 V	+ 42 V	+ 42 V
16	L-2 pin	R-8 pin	L-2 pin	L-8 pin
17	L-4 pin	R-2 pin	L-4 pin	R-2 pin
18	L-6 pin	R-4 pin	L-6 pin	R-4 pin
19	L-8 pin	R-6 pin	L-8 pin	R-6 pin
20	---	SG1	SG2	---

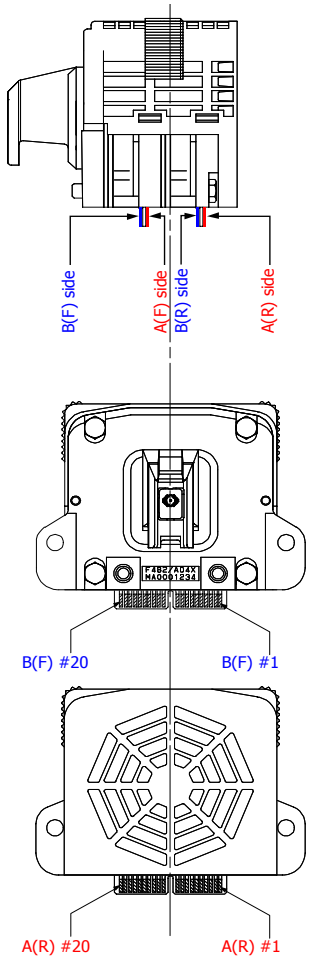

Figure 3-2. Printhead coil resistance check point

3.3.2 Troubleshooting based on error codes

This section describes troubleshooting based on the error codes that are displayed when a fatal error occurs.

Fatal Error Code 01: LES Error

The left end (LE) position is not detected.

- During the power on initialization carriage positioning operation, the LE Sensor (LES) signal is not detected.
- During normal carriage operation, the left end position is not detected even though the carriage has reached a position where the LE sensor signal should be detected.

Check, and if necessary replace, the following in the order below.

1. Check for a damaged or incorrectly-connected Carrier Cable Unit (FFC cable). Reconnect or replace the as necessary. See 4.2.4.16 CARRIER CABLE UNIT (p.189).
2. Check the LE sensor and its connector, and the Carrier PCB. If either are malfunctioning, replace the Carrier Unit. See 4.2.4.17 CARRIER UNIT (p.191).
3. Check and replace the ROM BOARD. See 4.2.3.2 ROM BOARD (p.137).

Fatal Error Code 02: CR Driver Error

The SP motor or driver circuit (IC18) is malfunctioning.

- The Mechanism Control ASIC has detected an abnormal current flow to the SP motor.
- A single phase of the SP motor was energized for longer than the allowed period of time.

Either the SP motor, driver, or both have malfunctioned.

Check both the SP motor and driver, and replace the SP MOTOR ASY (p.156), and/or ROM BOARD (p.137) as necessary.

Fatal Error Code 03: CR Horizontal Position Error

The SP motor brake signal did not switch on within 3 seconds after turning the printer on.

Check, and if necessary replace, the following in the order below.

1. Check for disconnected SP motor-related connectors (ROM BOARD: CNSPHS, CNSPM), See 4.2.3.3 SENSOR BOARD UNIT (p.139).
2. Check the Interlock switch, and if necessary replace the INLK SW ASY (p.146).
3. Check both the SP motor and driver. (Always check both.) Check for a broken fuse on the SP motor 42 V line. Replace the SP MOTOR ASY (p.156), and/or ROM BOARD (p.137) as necessary.

Fatal Error Code 04: PF Driver Error

The Mechanism Control ASIC detected either:

- Abnormal current to the LF motor
- A single phase of the LF motor was energized longer than the allowed period of time.

Either the driver, motor, or both have malfunctioned.

Check both the LF motor and the driver on the ROM Board (HIC1: SLA7025). Replace the LF MOTOR (p.161), ROM BOARD (p.137), or both as necessary.

Fatal Error Code 05: CR Error

This error occurs if, during the deceleration step count operation, the number of deceleration steps before the carriage stops exceeds the value specified in ROM.

Check and replace the following in the order below. Check functionality at each step.

1. Check the CES SCALE for damage, contamination, abnormal marks and improper installation. Reinstall or replace the CES SCALE (p.159) if necessary.
2. Replace the CARRIER UNIT (p.191) (the CE sensor is located on the Carrier Unit).
3. Replace the ROM BOARD (p.137).

Fatal Error Code 06: High Volt Error

The motor (42 V) or head drive (37 V) voltage rose above the allowable level.

This error indicates a power output problem, or a voltage detection circuit failure.

Check and replace the following in the order below, checking functionality at each step.

1. POWER UNIT (p.136)
2. ROM BOARD (p.137)

Fatal Error Code 07: Low Volt Error

The motor (+42 V) or head drive (+37 V) voltage fell below the allowable level.

This error indicates a power output problem, or a voltage detection circuit failure.

Check and replace the following in the order below, checking functionality at each step.

1. POWER UNIT (p.136)
2. ROM BOARD (p.137)

Fatal Error Code 08: Over Load Error

If a voltage overload is detected, the printer automatically enters low-speed printing mode. If the voltage does not then return to normal, this fatal error occurs, and the +42 V and +37 V lines are shut down.

This error indicates a power output problem, or a voltage detection circuit failure. Check and replace the following in the order below, checking functionality at each step.

1. POWER UNIT (p.136)
2. ROM BOARD (p.137)

Fatal Error Code **09: FAN1 Driver Error**
0A: FAN2 Driver Error
0B: FAN3 Driver Error
0C: FAN4 Driver Error

The ROM Board is sending drive current to the Fans, but the fan rotation sensor is not detecting rotation in one or more of the fans.

There is a malfunction in the Fan, Fan cable connector, sensor connector, or Fan driver circuit. Check the following in the order below, testing functionality at each step. Test the Fan driver circuitry on the ROM Board before installing a replacement fan.

1. Check the appropriate CNFANx (1 ~ 4) connector on the Sensor Board. See 4.2.3.3 SENSOR BOARD UNIT (p.139).
2. Check connectors CNSEN2 (42 V drive voltage supply connector), and CNSEN1 (FAN alarm signal input) on the ROM Board, Figure 4-13 on page 140.
3. Check and replace the FAN MOTORS (FAN1 MOTOR to FAN4 MOTOR) (p.208).
4. Replace the SENSOR BOARD UNIT (p.139).
5. Replace the ROM BOARD (p.137).

Fatal Error Code 0D: No Head Error

A check of the print head thermistor circuit during power-on initialization determined that the PRINT HEAD is not installed. This error is caused by the following:

- The Print Head is not installed.
- The Print Head built-in thermistor element has failed.
- The Carrier Cable is disconnected or damaged.
- The Print Head temperature detection circuit has failed.

Check the following in the order below, testing functionality at each step.

1. Check that the PRINT HEAD (p.152) is installed correctly.
2. Check the Carrier Cable connections. If the Carrier Cable is damaged, replace the CARRIER CABLE UNIT (p.189).
3. Check the following connectors on the ROM BOARD, Figure 4-10 on page 137:
   - CNFHD1
   - CNFHD2
   - CNRHD1
   - CNRHD2
4. Replace the ROM BOARD (p.137).

Fatal Error Code 0E: Head Driver Error

At least one pin of the print head has been energized for an excessive period of time.

This error is caused by a damaged Print Head drive element (TA1 to TA9: SDH02), or a short in the Carrier Cable.

1. Check and replace the CARRIER CABLE UNIT (p.189), and retest the printer.
2. If the error still occurs, replace the ROM BOARD (p.137).

Fatal Error Code 0F: APTC Error

This error occurs when the Home Position (HP) of the Automatic Paper Thickness Control (APTC) mechanism is not detected.

This error is caused by a malfunction of either the APTC HP sensor circuit, the APTC motor, or the driver circuit on the ROM Board.

Check the following in the order below, testing functionality at each step. If the APTC motor has malfunctioned, be sure to check the motor driver circuit on the ROM Board before replacing the motor.

1. Check connectors CNSEN1 and CNSEN2 on the ROM BOARD. See Figure 4-10 on page 137.
2. Check and replace the APTC HP UNIT (p.203).
3. Check both the APTC motor, APTC UNIT (p.169), ROM BOARD (p.137), and replace either or both as necessary.

Fatal Error Code 11: Ribbon Feed Driver Error

The Mechanism Control ASIC has detected a malfunction of the Ribbon Feed (RF) motor, RF motor driver element (HIC2: HIC3), or both.

A single phase of the Ribbon Feed (RF) motor was energized for longer than the allowed period of time.

Check both of the following, and replace all malfunctioning parts.

1. RF MOTOR (p.163).
2. ROM BOARD (p.137).

Fatal Error Code 12: Ribbon Jam Error

This error is indicated when the Hall-effect pulse signal of the ribbon jam sensor is not detected during Ribbon motor rotation.

Check for a ribbon jam, and replace the ribbon cartridge if necessary. If the ribbon cartridge is not jammed, this error may be the result of a malfunction of the RF sensor circuit, RF motor or RF motor driver circuit.

Check the following in the order below, testing for functionality at each step after step 3. Be sure to check both the motor driver on the ROM Board ***and*** the RF motor before replacing either. It may be necessary to replace both.

1. Check the RF Unit connectors CNRMS and CNRFS on the Sensor Board. Also check the RF Motor connector on the Sensor Board. See Figure 4-13 on page 140.
2. On the ROM Board, check connector CNSEN1 (includes the RJM signal input) and CNSEN2 (includes the drive signal output). See Figure 4-10 on page 137.
3. Check and replace the RF MOTOR (p.163).
4. Check and replace the RF UNIT (p.164).
5. Check and replace the ROM BOARD (p.137).

Fatal Error Code 13: HCPP Driver Error

This error occurs when the Mechanism Control ASIC detects that a single phase of the HCPP motor was energized for longer than the allowed period of time. This indicates a malfunction of either the HCPP motor, or ROM Board driver circuitry, or both.

Check and replace both of the following, and replace all malfunctioning parts. Do not replace the motor until the driver circuitry has been tested.

1. HCPP MOTOR (p.168).
2. ROM BOARD (p.137).

Fatal Error Code 14: HCPP Error

This error is indicated when the HCPP Sensor detects that the paper paths do not switch during a paper path switching operation.

Check the following in the order below, testing functionality at each step. If either the HCPP motor or driver circuit on the ROM Board have failed, always check both before installing the replacement part.

1. Check connectors CNSEN1 (PPSS signal input) and CNSEN2 (drive signal output) on the ROM Board. See Figure 4-10 on page 137.
2. Check the HCPP sensor connector CNPPSS on the Sensor Board. See Figure 4-10 on page 137.
3. Check the HCPP Sensor.
4. Check the HCPP motor and the HCPP driver circuit on the ROM board. Replace the HCPP MOTOR (p.168) and/or ROM BOARD (p.137).

Fatal Error Code 15: OC Driver Error

This error occurs when the Mechanism Control ASIC detects that a single phase of the OC Motor was energized for longer than the allowed period of time. This indicates a malfunction of either the HCPP motor, or ROM Board driver circuitry (TA10: STA485A), or both.

1. Check OC motor connector CNO/C on the Sensor Board. See Figure 4-10 on page 137.
2. Check both the OC motor and the OC motor driver circuitry on the ROM Board. To replace the ROM BOARD, See 4.2.3.2 ROM BOARD (p.137). If necessary, replace the OC MOTOR (p.166).

Fatal Error Code 16: OC Error

This error is indicated when the Mechanism Control ASIC determines that the Roller unit failed to open or close. This error is caused by a sensor failure (OC Sensor 1 or OC Sensor 2), an OC motor failure, or an OC motor driver circuit failure.

Check the following in the order below, testing functionality at each step. Check both the OC motor and OC motor driver circuit before replacing either, since a failure in one can cause a failure in the other.

1. Check connectors CNOCS1, CNOCS2, and CNO/C on the Sensor Board. See Figure 4-13 on page 140.
2. Check connectors CNSEN1 (OC Sensor 1/ OC Sensor 2 signal input) and CNSEN2 (drive signal output) on the ROM Board. See Figure 4-10 on page 137.
3. Check both the OC driver circuit and OC motor before replacing either, since a failure in one can cause a failure in the other. If necessary, replace the OC MOTOR (p.166), ROM BOARD (p.137), or both.

Fatal Error Code 17: PC Driver Error

This error occurs when the Mechanism Control ASIC detects that a single phase of the Perforation Cutter (PC) Motor was energized for longer than the allowed period of time. This indicates a malfunction of either the PC motor, or ROM Board PC motor driver circuitry, or both.

Check the following in the order below, testing functionality at each step. If either the PC motor or driver circuit on the ROM Board have failed, always check both before installing the replacement part.

1. Check the PC motor connector on the Sensor Board. See Figure 4-13 on page 140.
2. Check the PC motor, and the driver output signal on connector CNSEN2 on the ROM Board. See Figure 4-10 on page 137.
3. Replace the Perforation Cutter Unit, or ROM BOARD (p.137), or both.

Fatal Error Code 18: PC Error

This error is indicated when the reference position is not detected in a perforation cutter operation.

Check the following in the order below. Do not replace the PC Unit until the driver circuit on the ROM Board has been tested and you are sure it is functioning properly.

1. Check the fuse on the +37 V line.
2. Check the ROM Board connectors CNSEN1 (signal input from the reference position sensor), and CNSEN2 (drive signal output). See Figure 4-10 on page 137.
3. If the driver circuit (ROM Board) tests OK, replace the PC Unit.

Fatal Error Code 30: CG Error

This error is caused by a memory circuit failure on the ROM Board.

Replace the ROM BOARD (p.137)

Fatal Error Code 31: EEPROM Compare Error

This error is caused by a FRAM failure on the ROM Board.

Replace the ROM BOARD (p.137)

3.3.3 Troubleshooting based on symptoms

This section describes the troubleshooting based on symptoms of the printer.

Table 3-6. Troubleshooting Based on Symptoms

Symptom	Status	Reference
The printer does not perform, or does not complete, initialization after the power is turned on.	None of the Control Panel LEDs light.	Page 114
	The Control Panel LEDs all light, but stay on.	Page 114
	Normal Control Panel LED operation (all LEDs light briefly, but only the Power LED stays lit).	Page 114
	A Fatal Error message is displayed on the LCD.	Page 114

Table 3-6. Troubleshooting Based on Symptoms

Symptom	Status	Reference
Printing-related trouble	The printer does not receive or does not print data sent from the host computer.	Page 115
	The print results differ from the data sent from the host computer.	Page 115
	The printer does not start printing.	Page 115
	Some dots are missing, or unnecessary dots are printed.	Page 116
	The printout is spaced incorrectly.	Page 116
	The printout appears dirty, or there is ribbon ink or contamination on the printout.	Page 117
	The printout is faint, or the printed characters have uneven upper or lower edges.	Page 117
Ribbon-related trouble	The printout is partially printed white or the ribbon is disengaged.	Page 118
	Ribbon jam frequently occurs, or is frequently indicated.	Page 118

Table 3-6. Troubleshooting Based on Symptoms

Symptom	Status	Reference
Paper feed-related trouble	The printer does not feed continuous forms from the Front or Rear.	Page 119
	The Paper Path does not switch properly.	Page 119
	The paper feed position is incorrect.	Page 119
	Front-feed continuous forms will not feed backward.	Page 119
	Rear-feed continuous forms will not feed backward.	Page 119
	Paper is not fed or ejected properly.	Page 120
	Line spaces become narrow.	Page 120
	The paper is fed skewed.	Page 120
	Paper jams occur during paper feed.	Page 121
	The paper paths switch just before printing starts.	Page 121
Control panel-related trouble	The lamps on the control panel (OP Board) light improperly.	Page 121
	The switches on the control panel are inoperable.	Page 122

The printer does not initialize when the power is turned on		Troubleshooting procedure
None of the Control Panel LEDs light.	Power source problem.	1. Check the power cable connection at both ends. Perform a continuity check on the cable. 2. Verify that the wall socket supplies clean AC current that matches the voltage rating on the printer.
	Internal power problem	Check and replace the following in the order below. Check functionality at each step. 1. Check the connections at both ends of the OP CABLE. 2. Replace the OP CABLE (p.144) 3. Replace the OP UNIT (p.134) 4. Replace the POWER UNIT (p.136) 5. Initialize Page 51 or Replace Page 137 the ROM BOARD.
The Control Panel LEDs all light, but stay on.		Initialize Page 51 or Replace the ROM BOARD (p.137).
Normal Control Panel LED operation (all LEDs light briefly, but only the Power LED stays lit).	The printer stops initialization after the Control Panel LEDs light.	Check the following in the order below, testing functionality after each step. 1. Make sure the top cover is closed. 2. Check, and if necessary replace, the CO SW ASY (p.147) 3. Check the OP CABLE and connections. Replace the OP CABLE (p.144) if necessary. 4. Replace the OP UNIT (p.134). 5. Initialize Page 51 or Replace Page 137 the ROM BOARD.
	The printer stops initialization after the Control Panel LEDs light, but initializes normally after disconnecting the data interface cable.	1. Check and replace the data cable. 2. Check the host computer for failure.
A Fatal Error message is displayed on the LCD.		Refer to Troubleshooting based on error codes (p.106).

Printing-related failure		Troubleshooting procedure
The printer does not receive or does not print data sent from the host computer.	The printer does not print at all.	Perform the following and check functionality after each step. 1. Check that the data interface cable is functional and connected correctly to the printer and host computer. 2. Make sure the top cover is closed. 3. Check the Pause LED. If it is lit, press the Pause button.
	The printer prints the self test, but will not print data from the host computer.	1. Enter Setup Mode on the Control Panel, and make sure the interface setting matches the connection to the host computer. 2. Replace the interface cable. 3. Check the host computer. 4. Replace the ROM BOARD (p.137).
	The printer will not print a self test.	1. Verify that the CARRIER CABLE UNIT (p.189) is correctly connected to the PRINT HEAD and ROM BOARD. 2. Replace the ROM BOARD (p.137).
The print results differ from the data sent from the host computer.	The printer prints the self test, but does not correctly print data from the host computer.	1. Make sure that the application software is correctly configured for the printer. 2. Enter Setup Mode on the Control Panel, and make sure the interface setting matches the connection to the host computer. 3. Replace the interface cable. 4. Check the host computer. 5. Replace the ROM BOARD (p.137).
	The printer prints incorrectly, even for the self test.	1. Verify that the CARRIER CABLE UNIT (p.189) is correctly connected to the PRINT HEAD and ROM BOARD. 2. Replace the ROM BOARD (p.137).
The printer does not start printing.		Check the Pause LED. If it is lit, press the Pause button.

Printing-related failure	Troubleshooting procedure
Some dots are missing, or unnecessary dots are printed. (***NOTE:*** If the printed characters are uneven on their upper or lower edges, refer to Page 117.)	Perform the following, checking for functionality after each step. 1. Clean or Replace the CES SCALE (p.159). 2. Check that the CARRIER CABLE UNIT is correctly connected to the ROM BOARD and the PRINT HEAD. 3. Replace the CARRIER CABLE UNIT (p.189). 4. Replace the PRINT HEAD (p.152). 5. Replace the ROM BOARD (p.137).
The printout is spaced incorrectly.	1. Check that the APTC adjustment operates normally, and that the paper thickness adjustment is properly set. 2. Perform the Bi-D adjustment (p.250). 3. Clean and lubricate the STAY SHAFT (Carrier oil pads (p.267). 4. Clean or replace the CES SCALE (p.159). 5. Check the CR drive belt (SP BELT) tension adjustment (p.220). 6. Replace the SP BELT (p.158). 7. Replace the SP MOTOR ASY (p.156). 8. Replace the ROM BOARD (p.137).

Printing-related failure	Troubleshooting procedure
The printout appears dirty, or there is ribbon ink or contamination on the printout.	1. Verify that the ribbon cartridge is correctly installed. 2. Check that the ribbon is in good condition: no excessive wear, has not frayed, or come unravelled. Replace the ribbon cartridge if necessary. 3. Clean the PRINT HEAD so that it is free of ink or ribbon dust. 4. If printing on forms or paper of uneven thickness, use SelecType and adjust the settings for Platen Gap: Manual (0-14). 5. The following adjustments affect the platen gap: the Card guide mount position adjustment (p.227), the APTC thickness detection adjustment (p.238), and the APTC detection position adjustment (p.241). 6. If you print on Overlapping Multipart Forms, use SelecType on the Control Panel to change that setting to On. 7. Check and replace the (Auto Paper Thickness Control) APTC UNIT (p.169).
The printout is faint, or the printed characters have uneven upper or lower edges.	1. Replace the Ribbon Cartridge if it appears to be worn out. 2. Use SelecType to adjust the Manual Platen Gap. 3. The following adjustments affect the platen gap: the Card guide mount position adjustment (p.227), the APTC thickness detection adjustment (p.238), and the APTC detection position adjustment (p.241) 4. Replace the APTC UNIT (p.169). 5. Replace the PRINT HEAD (p.152). 6. Replace the ROM BOARD (p.137).

Ribbon-related failure	Troubleshooting procedure
The printout is partially printed white or the ribbon is disengaged. ■ **The ribbon has excess slack.** ■ **The ribbon is bent or folded.** ■ **The ribbon path at the printhead is too high or too low.** ■ **The ribbon is reversed.**	1. Reinstall or replace the ribbon cassette. 2. The ribbon may bind, bend or reverse if the CARD GUIDE ASY is not adjusted correctly. Perform the Card guide mount position adjustment (p.227) 3. Ribbon slack commonly occurs when the platen gap is too narrow, for example if the paper or form being printed is too thick. Make sure the paper is within specifications. If overlapping forms are being used, be sure the SelecType setting for Overlapping Multipart Forms is set to On. 4. Use SelecType to change the settings. See Platen gap setting (SelecType) (p.10) 5. The following adjustments affect the platen gap: the Card guide mount position adjustment (p.227), the APTC thickness detection adjustment (p.238), and the APTC detection position adjustment (p.241). 6. A portion of the ribbon has reversed (i.e., ink-side in). Check the ribbon for a reversed fold. Replace the ribbon cartridge if necessary.
Ribbon jam frequently occurs, or is frequently indicated.	1. Reinstall the ribbon cassette. If the cassette is defective, replace it. 2. If "false-positive" ribbon jam errors are indicated, replace the (Ribbon Feed) RF UNIT (p.164). 3. An improperly adjusted CARD GUIDE ASY impairs the ribbon's feed performance. Perform the Card guide mount position adjustment (p.227). 4. A deformed ribbon MASK can cause the ribbon to jam. Check and replace the Ribbon MASK (p.155) 5. Incorrect PRINT HEAD gap. The following adjustments affect the platen gap: the Card guide mount position adjustment (p.227), the APTC thickness detection adjustment (p.238), and the APTC detection position adjustment (p.241).

Paper feed related failure	Troubleshooting procedure
The printer does not feed continuous forms from the Front or Rear.	1. Check and replace the LF MOTOR (p.161). 2. Check and replace the ROM BOARD (p.137).
The Paper Path does not switch properly.	1. Check and replace the HCPP SENSOR UNIT (p.205). 2. Check and replace the HCPP MOTOR (p.168). 3. Check and replace the PR MECHA ASY (p.149). 4. ROM BOARD failure. Replace the ROM BOARD (p.137).
The paper feed position is incorrect.	1. Something may be wrong with the paper. Verify that the paper meets the Paper specifications (p.13) in Chapter 1. 2. Check the SelecType settings for Page length for the front and rear tractors. See Table 1-35. Setting values available in Selectype (p.48). ***NOTE:*** Page length settings in application software generally override SelecType settings, so check the application software settings if applicable. 3. Use the Panel Buttons to adjust the automatic loading position. See Top of Form (p.45). 4. Perform the TOF sensor sensitivity adjustment (p.235). If the TOF sensor is defective, replace the CARD GUIDE ASY (p.153). 5. If the paper feed position problem occurs with paper feed from the front, check the FTRPE (Front Tractor Paper Empty) Sensor. If the sensor has failed, replace the Front-Left tractor. See TRACTOR FL UNIT/TRACTOR FR UNIT (p.170). 6. If the paper feed position problem occurs with paper feed from the rear, check the RTRPE (Rear Tractor Paper Empty) Sensor. If the sensor has failed, replace the Rear-Left tractor. See TRACTOR RL UNIT/TRACTOR RR UNIT (p.172).
Front-feed continuous forms will not feed backward.	Check the FTRPE (Front Tractor Paper Empty) Sensor and front tractor units. If necessary, replace the TRACTOR FL UNIT/TRACTOR FR UNIT (p.170).
Rear-feed continuous forms will not feed backward.	Check the RTRPE (Rear Tractor Paper Empty) Sensor and rear tractor units. If necessary, replace the TRACTOR FL UNIT/TRACTOR FR UNIT (p.170).

Paper feed related failure	Troubleshooting procedure
Paper is not fed or ejected properly.	1. Perform the TOF sensor sensitivity adjustment (p.235), or replace the TOF Sensor - part of the CARD GUIDE ASY (p.153). 2. Check the TPE (Top Paper Empty) Sensor, and its connection to CNTPE on the Sensor Board. See Figure 4-13. SENSOR BOARD UNIT Removal (1) (p.140). If necessary, replace the TPE HOLDER ASY (p.201). 3. Check all cable connections on the Sensor Board. See Figure 4-13. SENSOR BOARD UNIT Removal (1) (p.140). 4. Replace the ROM BOARD (p.137).
Line spaces become narrow.	1. Verify that the paper is within specifications. See Paper specifications (p.13). 2. Check and if necessary replace the LF MOTOR (p.161). 3. Replace the POWER UNIT (p.136). 4. Replace the ROM BOARD (p.137).
The paper is fed skewed.	1. Verify that the paper is within all specifications. See 1.2.6 Paper specifications (p.13). Make sure the paper is mounted correctly and evenly in the tractors. 2. Use SelecType to change the settings for manual Platen gap setting (SelecType) (p.10). 3. Adjust the platen gap adjustment. The following adjustments affect the platen gap: the APTC thickness detection adjustment (p.238), and the APTC detection position adjustment (p.241). 4. Reinstall the CARD GUIDE ASY (p.153), and perform the Card guide mount position adjustment (p.227).

Paper feed related failure	Troubleshooting procedure
Paper jams occur during paper feed.	1. Verify that the paper is within all Paper specifications (p.13), and make sure the paper is mounted correctly and evenly in the tractors. 2. Perform the Card guide mount position adjustment (p.227) 3. Change the SelecType setting for manual Platen gap setting (SelecType) (p.10) 4. Perform the PRINT HEAD gap adjustment. The following adjustments affect the platen gap: the APTC thickness detection adjustment (p.238), and the APTC detection position adjustment (p.241) 5. Check the Paper Jam Sensor, and if it is defective, replace the PJS HOLDER ASY (p.195)
The paper paths switch just before printing starts.	Check the paper path setting in the printer driver.

Control Panel related failure	Troubleshooting procedure
The lamps on the control panel (OP Board) light improperly.	1. Verify the OP CABLE connection between the OP Board and ROM BOARD. See Figure 4-6. OP UNIT Removal (p.134), and Figure 4-10. ROM BOARD Removal (1) (p.137). 2. If necessary, replace the OP CABLE (p.144) 3. Check and replace the OP UNIT (p.134) 4. Check and replace the ROM BOARD (p.137)

Control Panel related failure	Troubleshooting procedure
The switches on the control panel are inoperable.	1. Check whether the printer has been Paused, and if so place the printer online. 2. Verify the OP CABLE connection between the OP Board and ROM BOARD. See Figure 4-6. OP UNIT Removal (p.134), and Figure 4-10. ROM BOARD Removal (1) (p.137). 3. If necessary, replace the OP CABLE (p.144) 4. Cycle (turn off and back on) the printer's power and confirm the trouble symptom. ***NOTE:*** If the printer is producing abnormal odor or smoke, ***do not turn the power back on until the source has been determined and the problem resolved.*** 5. Check and replace the OP UNIT (p.134) 6. Check and replace the ROM BOARD (p.137)

CHAPTER

4

DISASSEMBLY AND ASSEMBLY

4.1 Overview

This section describes procedures for disassembling and assembling the Epson DFX 9000. Unless otherwise specified, disassembled units or components can be re-assembled by reversing the disassembly procedure. Special tips or precautions for any disassembly or assembly procedure are described under the heading “CHECK POINT”. Any adjustments required after disassembling the units are described under the heading “ADJUSTMENTS”.

4.1.1 Disassembly precautions

Follow the precautions below when disassembling the printer.

WARNING

- Before disassembling, assembling or adjusting the printer, disconnect the power supply cable from the AC power socket. Failure to do so might cause personal injury.
- Let the printer set for at least 5 minutes after disconnecting the AC cable to allow the electrolyte capacitor on the power supply board to completely discharge.
- Be careful with the Printhead when you handle it as it may be very hot right after printing.
- Do not touch the heat sink attached to the switching FETs (Q101, 102, 103, 301, 302, 303) on the power supply board right after power off, as it may be very hot.

CAUTION

To maintain efficient printer operation, take the precautions below:

- Use only the recommended tools for maintenance work.
- Use only the recommended lubricants and adhesives. (See Chapter 6.)
- Do not neglect to perform any of the adjustments listed as part of a disassembly/reassembly procedure. Adjust the printer only in the manner described in this manual.
- Always wear gloves for disassembly and reassembly to avoid iujury from sharp metal edges.
- To protect sensitive microprocessors and circuitry, use static discharge equipment, such as anti-static wrist straps, when accessing internal components.
- When using compressed air products; such as air duster, for cleaning during repair and maintenance, the use of such products containing flammable gas is prohibited.

CHECK POINT

Formal part names are shown in all upper case, such as: SIDE FRAME, LEFT.

4.1.2 Tools and instruments

The table below lists the tools and the instruments required for disassembling, assembling or adjusting the printer. Use only tools that meet these specifications.

Table 4-1. Tool and Instrument List

Name	Specification	Epson Part No.
Phillips screwdriver	No.2	B743800200
Phillips screwdriver	No.1	B743800100
Screwdriver	Flat head	-
Hex nut driver	5 mm	B741700200
Tweezers	-	B741000100
Round-nose pliers	-	B740400100
Thickness gauge	-	B776702201
E-Ring holder	Size: #6	B740800800
Cotton tape	10 mm (1/2 in) wide	-
Multi-Meter	Ohm/Voltage/Current	-
Oscilloscope	Min. 50MHz	-

Note: All tools and instruments listed above are commercially available.

4.1.3 Abbreviations for small parts

The table below lists the abbreviations used in this manual for small parts, such as screws and washers.

Table 4-2. List of Screws Used

No.	Name and specification	Image
1	C.B.S (M3 × 6) C.B.S. (M3 × 8)	
2	C.P. (S-P1) (M2.5 × 8) C.P. (S-P1) (M3 × 6) C.P. (S-P1) (M3 × 8) C.P. (S-P1) (M4 × 8) C.P. (S-P1) (M3 × 16) C.P. (S-P1) (M4 × 10) C.P. (S-P1) (M4 × 12)	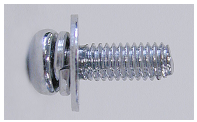
3	C.B.P. (M3 × 8) C.B.P. (M3 × 10) C.B.P. (M4 × 16)	

Table 4-2. List of Screws Used

No.	Name and specification	Image
4	C.P. (M3 × 6)	
5	Jack Screw (5 mm)	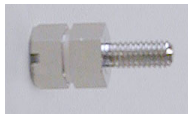
6	C.F. (M2.5 × 6) C.F. (M3 × 4)	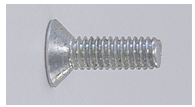

4.1.4 Service check after repair

After you repair the product, use the check list below to check and record the status of the repaired product before returning the product to the user. This list can be used as a record of all service work performed with the product.

Table 4-3. Repair Status Check List

Category	Component	Item to Check	Status
Printer Mechanism	Printhead	Do all 36 pins print properly?	■ Checked, OK ■ Not necessary
	Carriage Mechanism	Does the carriage move smoothly? ■ Noisy? ■ Any dirt or excessive oil?	■ Checked, OK ■ Not necessary
		Does the CR Motor operate at normal temperature? (Not too hot?)	■ Checked, OK ■ Not necessary
	Paper Feed Mechanism	Does paper advance smoothly? ■ Noisy? ■ Does paper feed without jamming?	■ Checked, OK ■ Not necessary
		Does the PF Motor operate at normal temperature? (Not too hot?)	■ Checked, OK ■ Not necessary
Printer Mechanism	Paper Path	Do all types of paper advance smoothly?	■ Checked, OK ■ Not necessary
		Is the tractor feeding paper smoothly?	■ Checked, OK ■ Not necessary
		Are all paper paths clear of obstructions?	■ Checked, OK ■ Not necessary
		Is the platen free of damage?	■ Checked, OK ■ Not necessary

Table 4-3. Repair Status Check List (continued)

Category	Component	Item to Check	Status
Printer Mechanism	Ribbon Mask	Is the ribbon mask free of damage?	■ Checked, OK ■ Not necessary
Operation	Self-Test	Was the self-test print successful?	■ Checked, OK ■ Not necessary
	On-line Test	Was the on-line print successful?	■ Checked, OK ■ Not necessary
Adjustment	Platen-Gap	Is the gap adjusted correctly? PG = 0.38 mm (0.02 inch)	■ Checked, OK ■ Not necessary
	Bi-D Alignment	Is the Bi-Directional alignment correct? Bi-D test print OK?	■ Checked, OK ■ Not necessary
ROM	Version	Latest version =	■ Checked, OK ■ Not necessary
Packing	Ribbon Cartridge	Has the ribbon cartridge been removed from the printer?	■ Checked, OK ■ Not necessary
	Attachments	Have all relevant attachments been packed together with the printer?	■ Checked, OK ■ Not necessary

4.2 Main components disassembly

This section provides the disassembly procedures. The basic order for disassembly is shown in the flowchart below. The exploded diagrams, provided in the Appendix, "Exploded diagrams" (page 318), are helpful to see how components are engaged with each other.

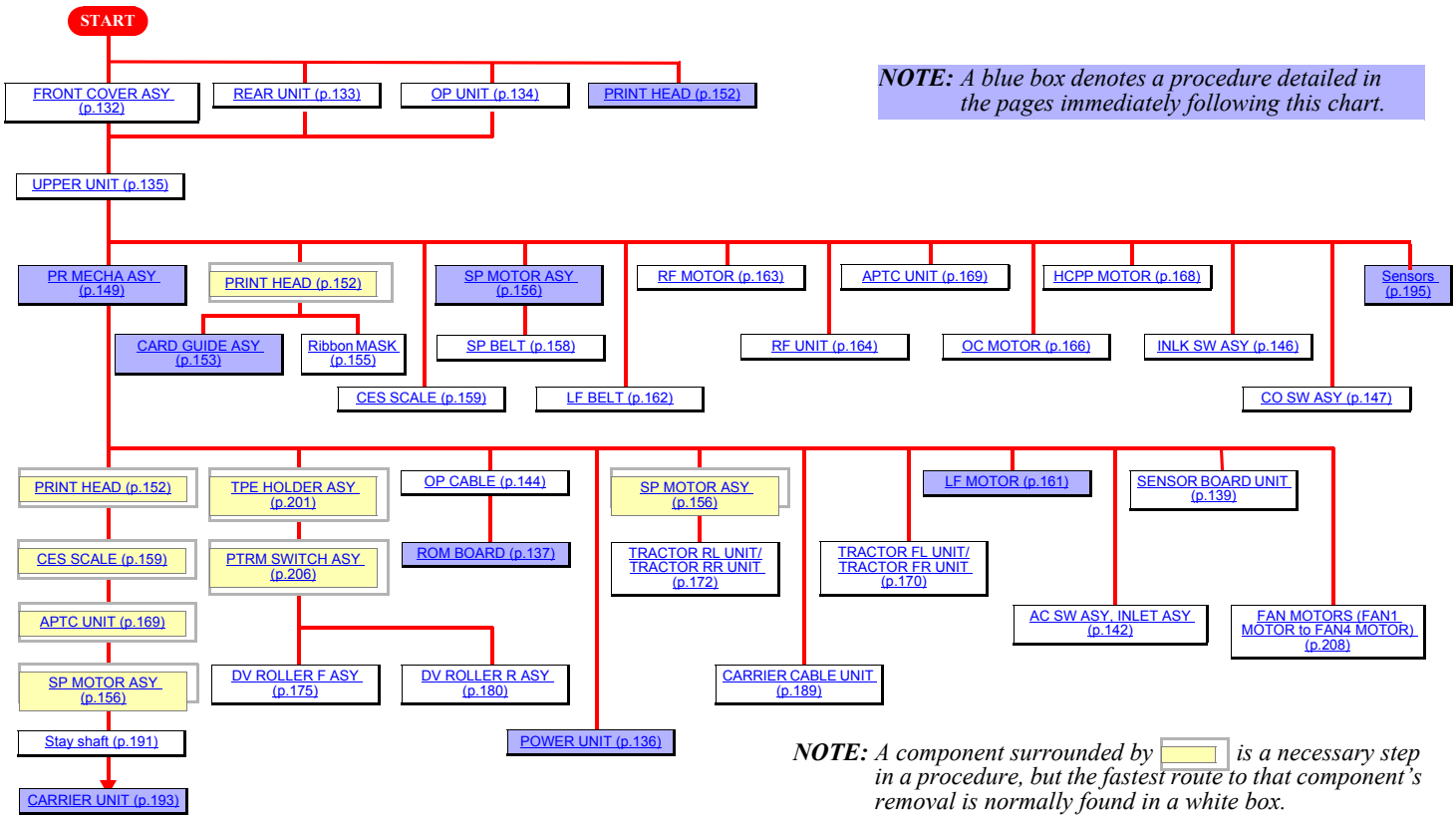

Figure 4-1. Disassembly Flowchart (Whole)

4.2.1 Major component replacement flowcharts

PR MECHA ASY (p. 149)

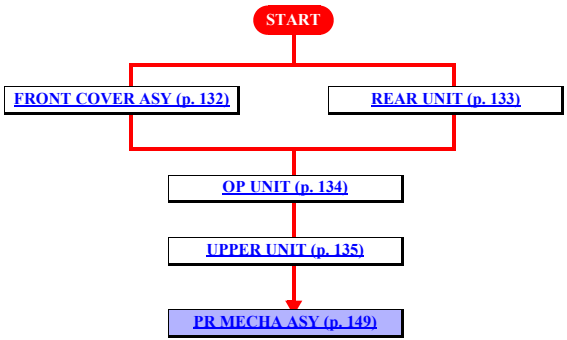

ROM BOARD (p. 137) / POWER UNIT (p. 136))

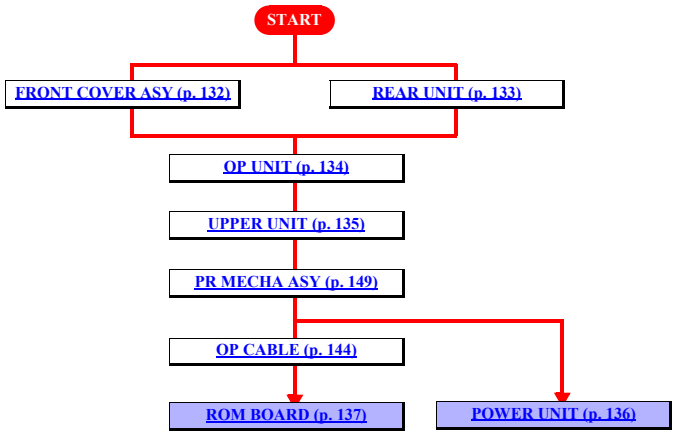

PRINT HEAD (p. 152) / CARD GUIDE ASY (p. 153)

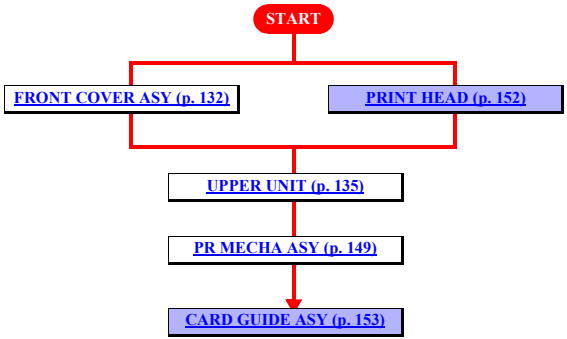

SP MOTOR ASY (p. 156) / LF MOTOR (p. 161)

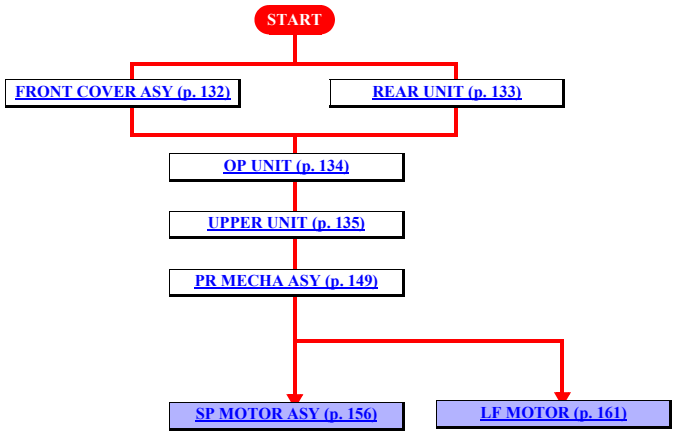

Sensors (p. 195)

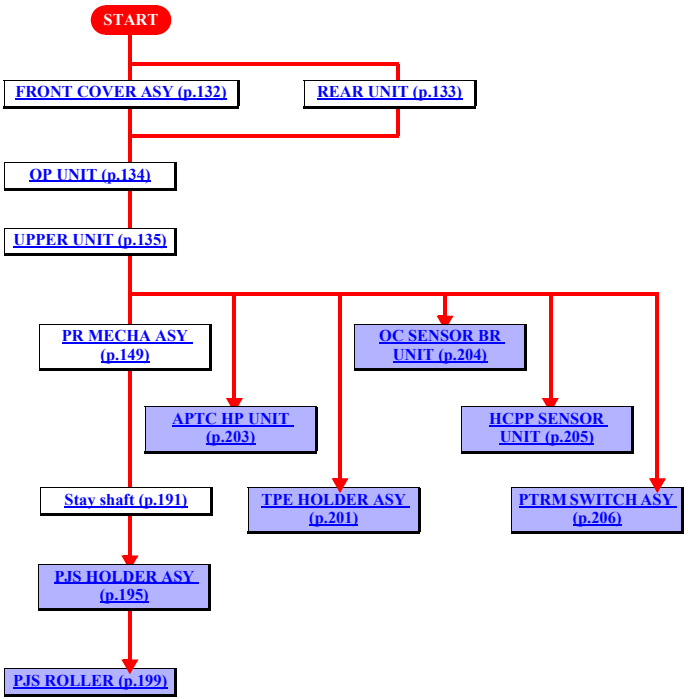

CARRIER UNIT (p. 191)

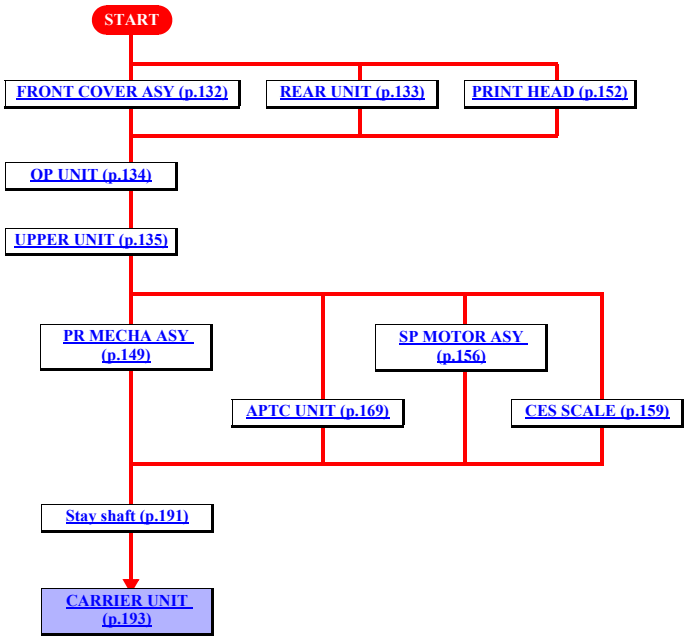

4.2.2 Covers

4.2.2.1 FRONT COVER ASY

1. Facing the front of the printer, open the FRONT COVER ASY, and remove the stopper on the left inside of the FRONT COVER ASY in the direction of the arrow.

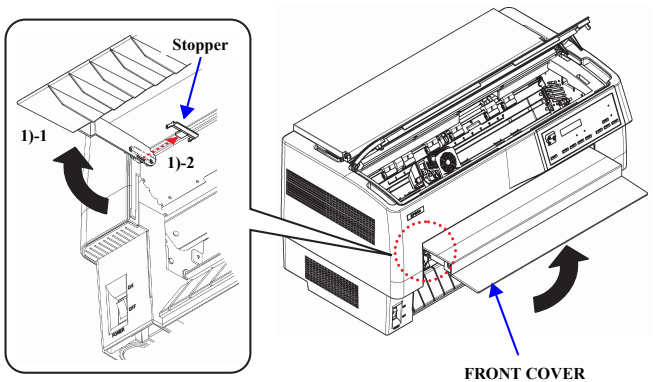

Figure 4-2. FRONT COVER ASY Removal (1)

2. With the FRONT COVER ASY open, push it to the right until the center bows upward enough to release it from the hinge pin on the left side of the UPPER UNIT.
3. Release the hinge pin on the right side of the UPPER UNIT, and remove the FRONT COVER ASY toward you.

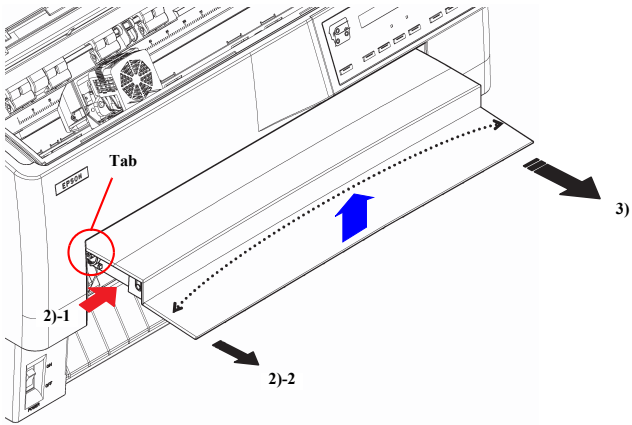

Figure 4-3. FRONT COVER ASY Removal (2)

4.2.2.2 INTERFACE COVER

1. Facing the rear of the printer, release the two tabs that secure the INTERFACE COVER to the REAR UNIT, and open the INTERFACE COVER.
2. Release one of the two hinge pins that secure the INTERFACE COVER to the LOWER UNIT while pressing the tab in the direction of the arrow, and remove the INTERFACE COVER straight back.

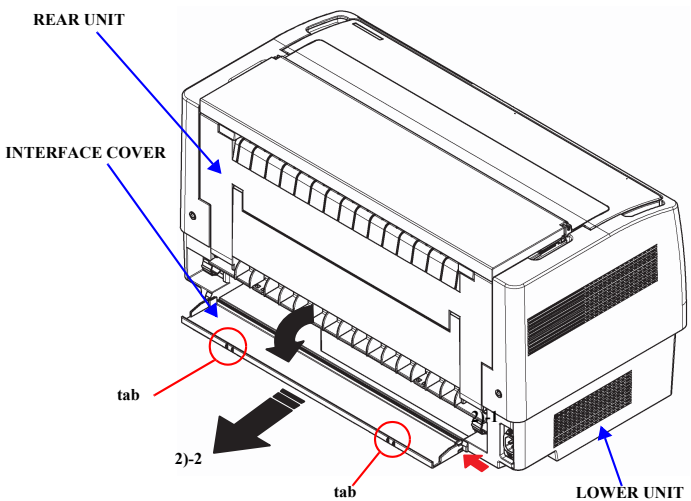

Figure 4-4. INTERFACE COVER Removal

4.2.2.3 REAR UNIT

1. Open the REAR UNIT and remove the four screws (two on either side) that secure it to the printer.
2. Lift the REAR UNIT upward at an angle to remove it.

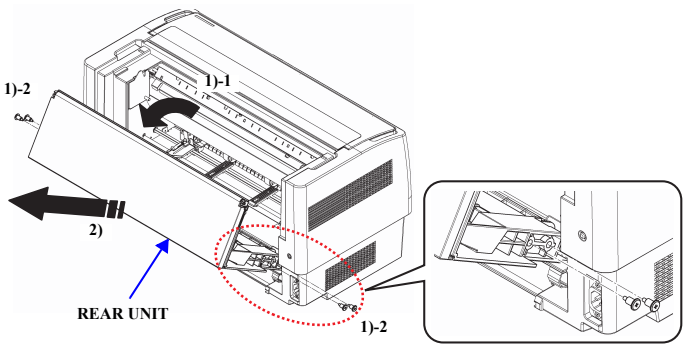

Figure 4-5. REAR UNIT Removal

4.2.2.4 OP UNIT

1. Open the TOP COVER, and release the three tabs on the inside top edge of the OP UNIT by pressing them from inside the UPPER UNIT. Gently pull the OP UNIT out toward you to gain access to the OP CABLE.
2. Disconnect the OP CABLE from the connector on the back of the OP UNIT, and then remove the OP UNIT.

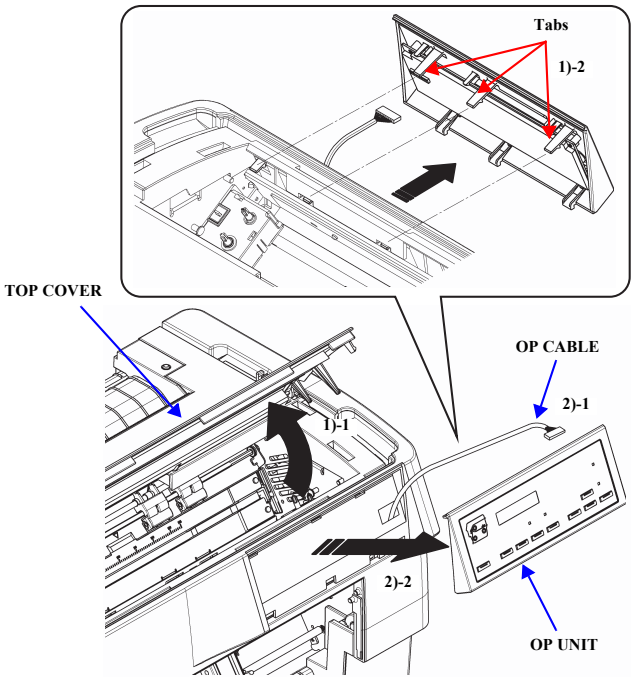

Figure 4-6. OP UNIT Removal

4.2.2.5 UPPER UNIT

1. Remove the FRONT COVER ASY (p. 132)
2. Remove the REAR UNIT (p. 133)
3. Remove the OP UNIT (p. 134)
4. Remove the two C.P. (S-P1) 4 × 12 screws that secure the UPPER UNIT.
5. Pull the two parts of the UPPER UNIT shown in Figure 4-7 toward you to release the two tabs (right and left) that secure the UPPER UNIT to the LOWER UNIT, and lift the UPPER UNIT upward to remove it.
6. Open the TOP COVER and remove it upward.

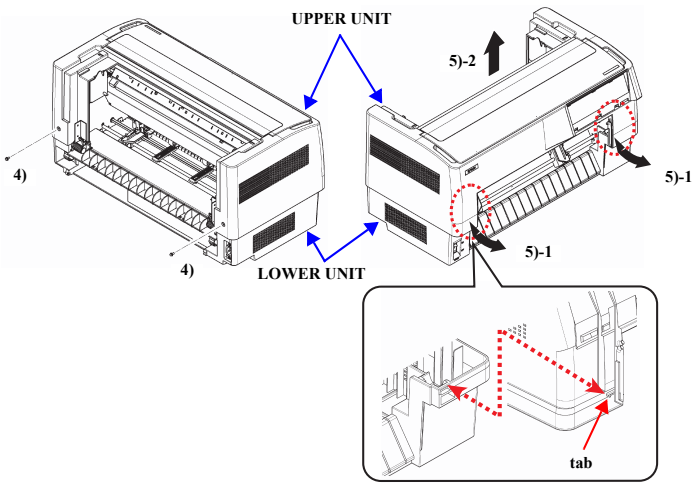

Figure 4-7. UPPER UNIT Removal (1)

7. Remove the two C.B.P. 3 × 8 screws, one on each side, that secure the TOP COVER rotation stops to the inside of the UPPER UNIT.

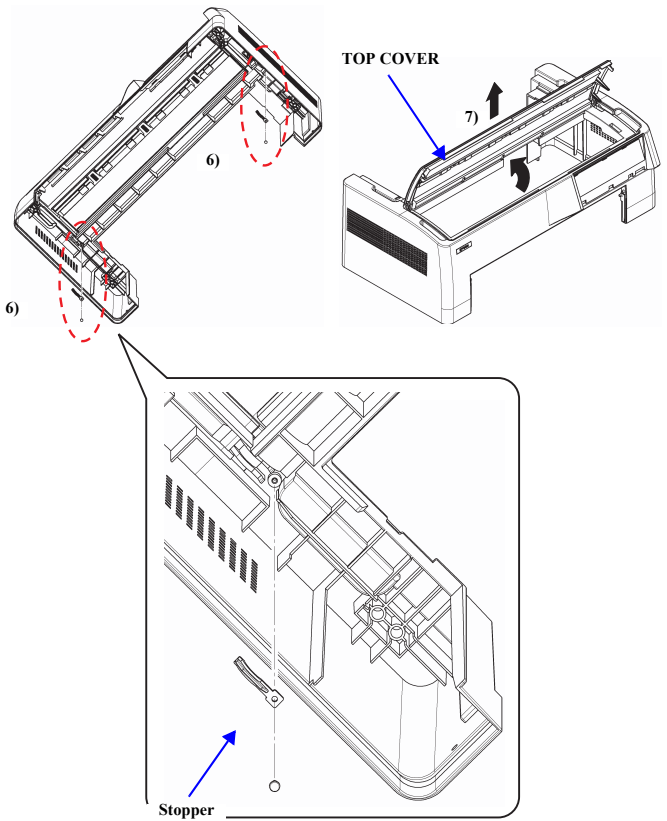

Figure 4-8. UPPER UNIT Removal (2)

4.2.3 Electrical circuit board removal

4.2.3.1 POWER UNIT

WARNING

- Disconnect the power cable and wait at least 5 minutes to allow capacitors to drain before disassembling the POWER UNIT. If you touch the POWER UNIT with the power supplied, you may receive an electric shock.
- Be careful with the edges of the shield plate, as they are very sharp.

1. Remove the PR MECHA ASY (p. 149)
2. Remove the two C.B.P. 4 × 16 screws that secure the left side bracket used to attach the REAR UNIT, and remove the bracket upward.
3. Disconnect the ACIN and CNPW cables (see the arrows in Figure 4-9) from the POWER UNIT.

No.	Pins	Color	Connects to
ACIN	3	White	AC SW / INLET SW
CNPW	12	White	ROM BOARD

4. Remove the six C.B.P. 3 × 10 screws that secure the POWER UNIT to the LOWER UNIT.
5. Lift the rear of the POWER UNIT slightly, and slide it rearward in the direction of the arrow. Release the two tabs that secure the front of the POWER UNIT as you lift it by the rear and remove it.

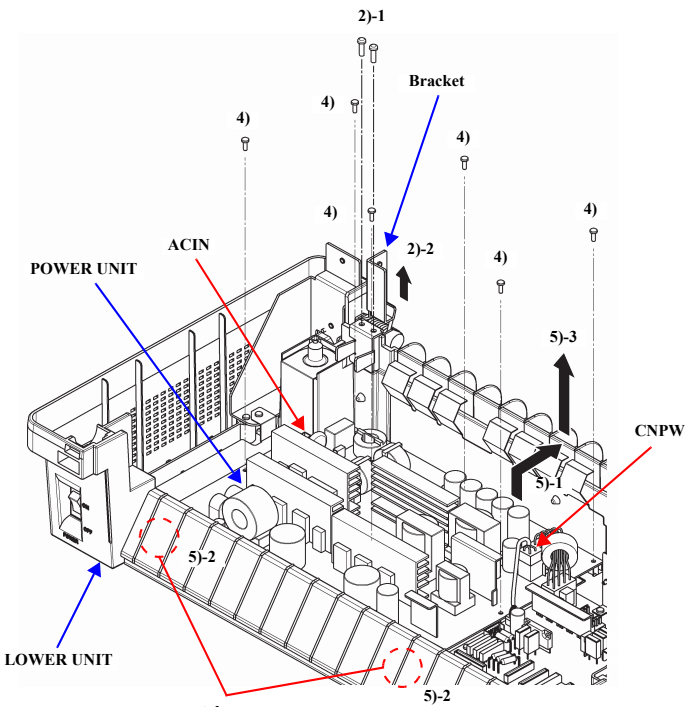

Figure 4-9. POWER UNIT Removal

4.2.3.2 ROM BOARD

WARNING

Be careful with the edges of the shield plate, as they are very sharp.

CHECK POINT

When replacing the ROM BOARD, be sure to first try to backup the parameters stored on the EEPROM of the board, using the "EEPROM Data Copy" function of the adjustment program, before replacing it.

If you can successfully make a backup, all software adjustment can be omitted by restoring the backed up parameters to the replacement ROM BOARD.

1. Remove the PR MECHA ASY (p. 149)
2. Remove the OP CABLE (p. 144)
3. Remove the two C.B.S. 3 × 12 screws that secure the Type B board cover, and remove the Type B board cover.
4. Remove the five C.B.P. 3 × 10 screws that secure the ROM BOARD.
5. Slightly lift the rear of the ROM BOARD to release it from the tabs, and slide it to the front. Lift the rear of the ROM BOARD to remove it upward.

CAUTION

- When removing the ROM BOARD, be careful not to snag the parallel I/F cable connector clasps. (A)
- Remove the ROM BOARD slowly in order not to peel off the cooling sheets shown in Figure 4-10

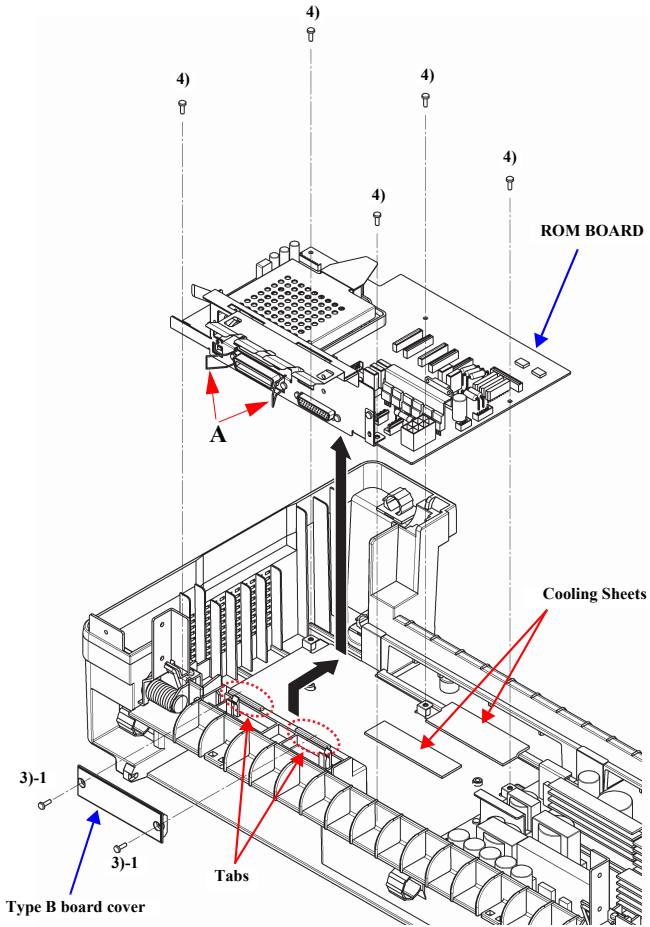

Figure 4-10. ROM BOARD Removal (1)

6. Remove the two C.B.S. 3 × 6 screws that secure the Guide plate, slide it back from the Interface Plate, and remove the Guide plate upward.
7. Release the two tabs that secure the Guide rail to the ROM BOARD, and remove the Guide rail in the direction of the arrow in Figure 4-11.
8. Remove the two C.P. 3 × 6 screws and two 5 mm Jack Screws that secure the Interface plate, and remove the ROM BOARD.

ADJUSTMENT REQUIRED

If "EEPROM Data Copy" is unsuccessful, be sure to perform the following adjustments after replacing the ROM BOARD.

1. Clear EEPROM (p. 51), in Chapter 1.
2. APTC thickness detection adjustment (p. 238)
3. APTC detection position adjustment (p. 241)
4. Top margin adjustment (p. 245)
5. Left margin adjustment (p. 247)
6. Bi-D adjustment (p. 250)
7. Main Board Initialization (p. 252)
8. Firmware Update (p. 253)

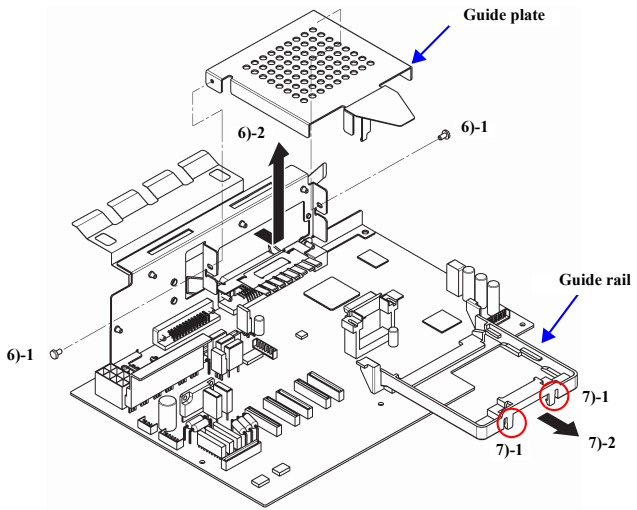

Figure 4-11. ROM BOARD Removal (2)

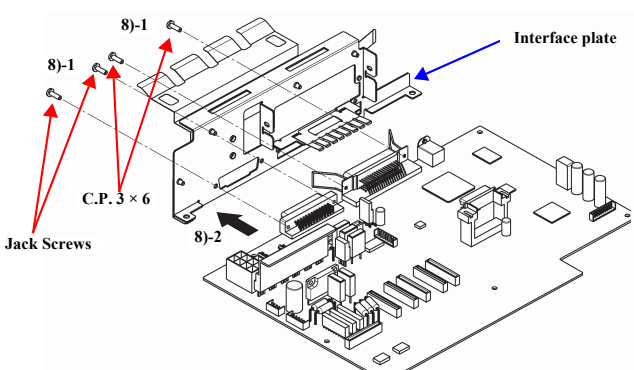

Figure 4-12. ROM BOARD Removal (3)

4.2.3.3 SENSOR BOARD UNIT

WARNING

Disconnect the power cable and wait at least 5 minutes for capacitors to drain before disassembling the POWER UNIT. If you touch the POWER UNIT with the power supplied, you may receive an electric shock.

CAUTION

When removing or installing the SENSOR BOARD UNIT, handle the Cable M with care. There is a ferrite core attached to it for electromagnetic interference protection.

1. Remove the PR MECHA ASY (p. 149)
2. Disconnect all the cables except Cable M and Cable S from the SENSOR BOARD UNIT. See the connector map, Figure 4-13 on page 140.

Table 4-4. SENSOR BOARD connector definitions

Connector Name	Pins	Color	Connects to
CNO/C	5	White	OC MOTOR
CNHCPP	5	Black	HCPP MOTOR
CNAPTC	5	Red	APTC MOTOR
CNRB	4	White	RF MOTOR
CNFAN1	3	White	FAN1 MOTOR
CNFAN2	3	Black	FAN2 MOTOR
CNFTRPES	3	Brown	FTRPES Sensor
CNOCS2	3	Red	OC Sensor 2
CNPJS	3	Blue	PJS Sensor
CNTPES	3	Orange	TPES Sensor
CNPC	9	White	Perforation Cutter Unit
CNAPTCHPS	3	Orange	APTC HP Sensor
CNFAN3	3	Red	FAN3 MOTOR
CNFAN4	3	Blue	FAN4 MOTOR
CNOCS1	3	Black	OC Sensor 1
CNPPSS	3	White	PPSS Sensor
CNRTRPES	3	Purple	RTRPES Sensor
CNCOS	2	Red	CO SW ASY
CNAPTCS	4	White	APTC Sensor
CNRMS	2	Orange	RMS Switch
CNPTRM	2	Green	PTRM Sensor
CNRFS	3	Green	RFS Sensor

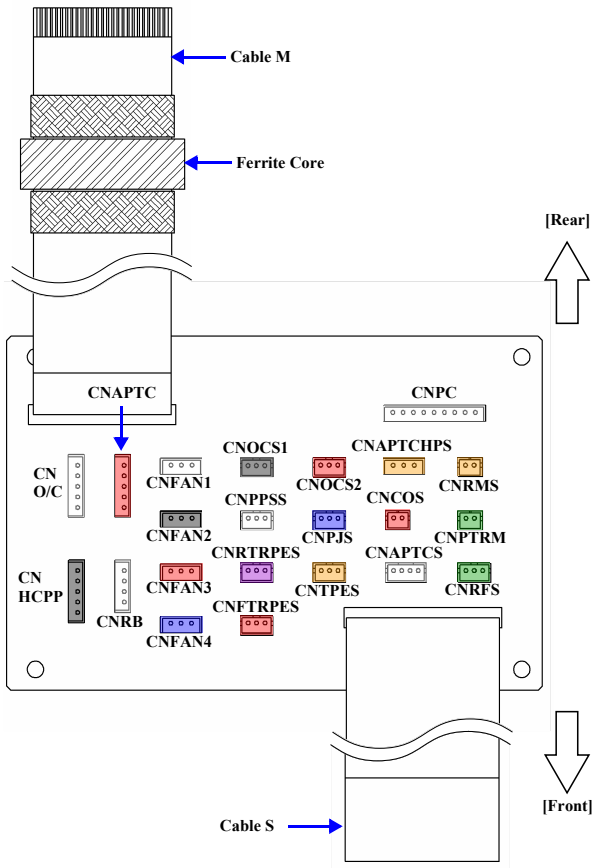

Figure 4-13. SENSOR BOARD UNIT Removal (1)

3. Pinch the locking tabs on the four L-Cap spacers that secure the SENSOR BOARD UNIT to the bottom rear of the printer, and remove the SENSOR BOARD UNIT.

Reassembly

- Do not install the SENSOR BOARD UNIT upside down or reversed.
- Be sure all cables are reconnected securely.

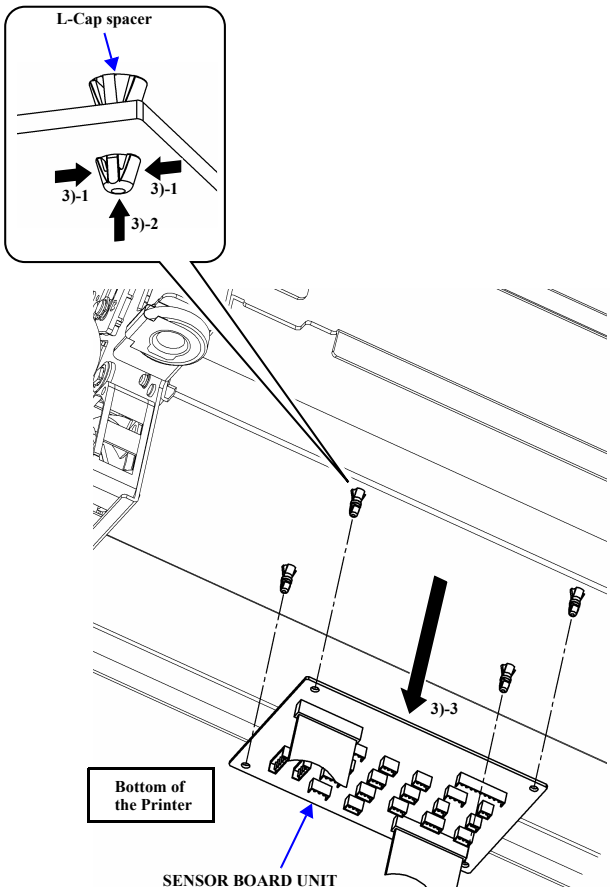

Figure 4-14. SENSOR BOARD UNIT Removal (2)

4.2.3.4 AC SW ASY, INLET ASY

WARNING

Disconnect the power cable and wait at least 5 minutes for capacitors to drain before disassembling the POWER UNIT. If you touch the POWER UNIT with the power supplied, you may receive an electric shock.

1. Remove the PR MECHA ASY (p. 149)
2. Release the AC SW ASY cables from the three cable routing tabs and two cable clamps that secure the AC SW ASY cable to the LOWER UNIT.
3. Disconnect the AC SW ASY connector (ACIN: 3 pins) from the POWER UNIT.
4. Disconnect the AC SW ASY cables (blue and brown) from the INLET ASY.

Reassembly

Connect the AC SW ASY cable to the INLET ASY correctly, as shown in Figure 4-15.

- Upper pin: the blue cable.
- Lower pin: the brown cable.

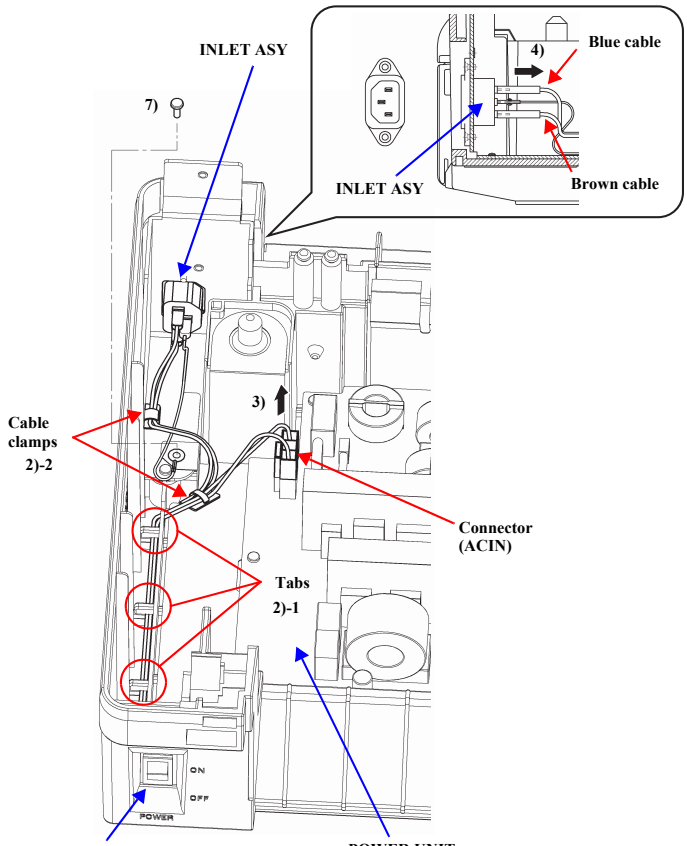

Figure 4-15. AC SW ASY Removal (1)

5. Remove the AC SW ASY by pushing it out from inside the LOWER UNIT while pressing down the upper locking tab.
6. Pull the AC SW ASY cables out of the LOWER UNIT.

CHECK POINT

To fit the cables through the switch hole, first pull the Blue and Brown cables from the INLET ASY through, then pull through the cable and connector for the POWER UNIT.

7. Remove the C.P. (S-P1) 4 × 8 screw that secures the INLET ASY ground wire to the LOWER UNIT.
8. Remove the two C.F. 3 × 4 screws that secure the INLET ASY to the LOWER UNIT, and remove the INLET ASY.

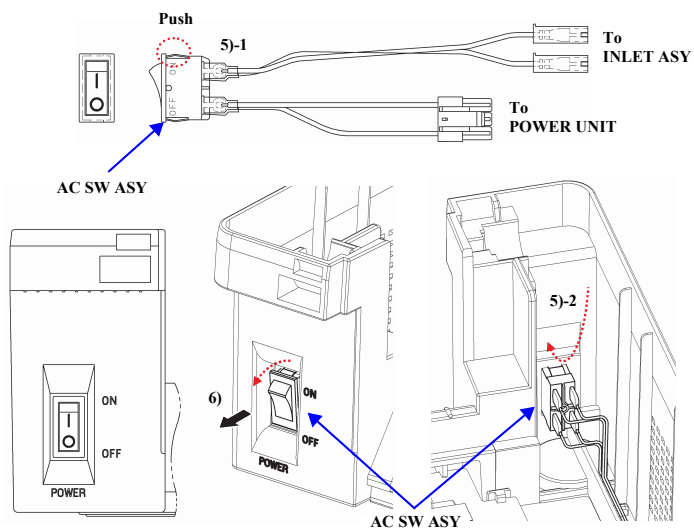

Figure 4-16. AC SW ASY Removal (2)

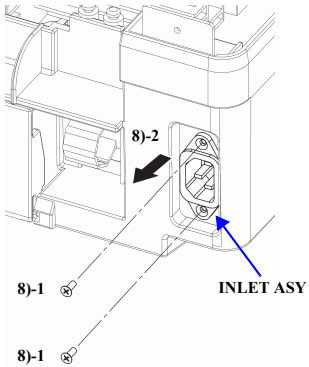

Figure 4-17. INLET ASY Removal

4.2.3.5 OP CABLE

WARNING

Disconnect the power cable and wait at least 5 minutes for capacitors to drain before disassembling the POWER UNIT. If you touch the POWER UNIT with the power supplied, you may receive an electric shock.

CAUTION

Handle the OP CABLE with care. It is shielded, and a ferrite core is attached to it for electromagnetic interference prevention.

1. Remove the PR MECHA ASY (p. 149).
2. Release the OP CABLE from the two clamps that secure the OP CABLE to the LOWER UNIT.
3. Disconnect the OP CABLE connector from the ROM BOARD (CNOP: 10 pins), and remove the OP CABLE.
4. Open the two ferrite cores at their partition points, and remove them from the OP CABLE.
5. Remove the C.B.S. 3 × 8 screw that secures the cable clamp to the right side frame.

Reassembly

- When replacing the OP CABLE, wrap cotton tape around the OP CABLE five or six times in the position shown in Figure 4-18. This will help the upper ferrite core stay in the correct position on the cable.
- After wrapping the OP CABLE with cotton tape, install the two ferrite cores in the positions shown in Figure 4-18.

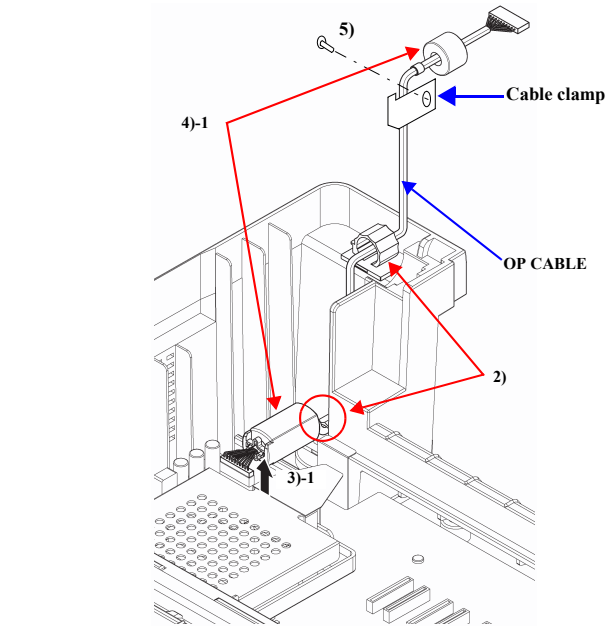

Figure 4-18. OP CABLE Removal

4.2.3.6 PSU1 CABLE

WARNING Disconnect the power cable and wait at least 5 minutes for capacitors to drain before disassembling the POWER UNIT. If you touch the POWER UNIT with the power supplied, you may receive an electric shock.

CAUTION Handle the SU1 Cable with care. It has a ferrite core attached for electromagnetic interference prevention.

1. Remove the PR MECHA ASY (p. 149).
2. Disconnect the three connectors (CNPW: 12 pins, CNPW: 8 pins, CNLOGPW: 4 pins) on the ROM BOARD and POWER UNIT, and remove the PSU1 CABLE.
3. Open the ferrite core at its partition point, and remove it from the PSU1 CABLE.

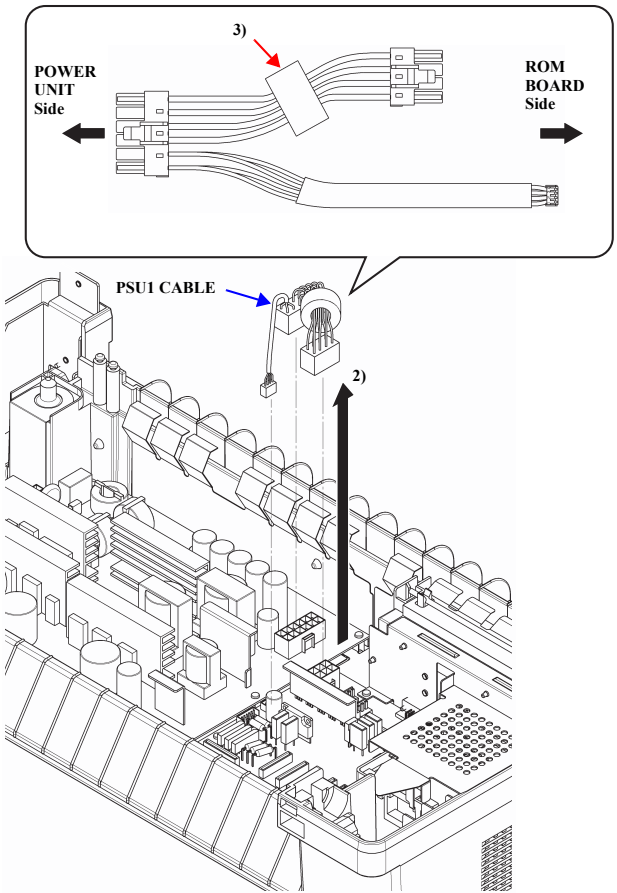

Figure 4-19. PSU1 CABLE Removal

4.2.3.7 Safety switches

INLK SW ASY

WARNING

- Disconnect the power cable and wait at least 5 minutes for capacitors to drain before disassembling the POWER UNIT. If you touch the POWER UNIT with the power supplied, you may receive an electric shock.
- Do not touch the motors immediately after using the printer, or you may burn your hand. Allow the motors to cool enough to work with them.

1. Remove the UPPER UNIT (p. 135)
2. Tilt up the rear of the PR MECHA ASY and support it using the tilt bar. Refer to section 4.2.4.1 PR MECHA ASY, p. 149.
3. Release the INLK SW ASY cable from the three clamps (SIDE FRAME, RIGHT: 2 places, bottom rear: 1 place).
4. Disconnect the INLK SW ASY cable from the ROM BOARD (CNINLK: 4 pins), and pull the INLK SW ASY cable out through the hole in the SIDE FRAME, RIGHT.

CAUTION

When performing the following procedure, be careful not to bend the lever of the INLK SW ASY.

5. Remove the C.P. (S-P1) 3 × 16 screw that secures the INLK SW ASY, and remove the INLK SW ASY.

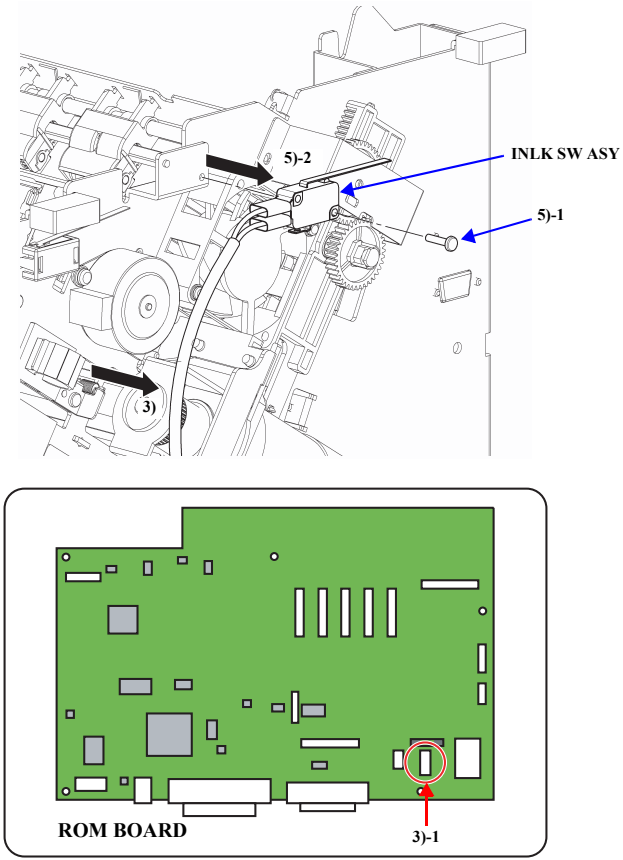

Figure 4-20. INLK SW ASY Removal

CO SW ASY

WARNING

- Disconnect the power cable and wait at least 5 minutes for capacitors to drain before disassembling the POWER UNIT. If you touch the POWER UNIT with the power supplied, you may receive an electric shock.
- Do not touch the motors immediately after using the printer, or you may burn your hand. Allow the motors to cool enough to work with them.

1. Remove the UPPER UNIT (p. 135)
2. Tilt up the rear of the PR MECHA ASY and support it using the tilt bar. Refer to section 4.2.4.1 PR MECHA ASY, p. 149.
3. Release the CO SW ASY cable from the three clamps (SIDE FRAME, RIGHT: 2 places; bottom rear: 1 place).
4. Disconnect the CO SW ASY cable from the SENSOR BOARD UNIT (CNCOS: 2 pins), and pull the CO SW ASY cable out through the hole in the SIDE FRAME, RIGHT.

CAUTION

When performing the following procedures, be careful not to bend the lever of the CO SW ASY.

5. Release the front tab of the CO SW ASY from the inside of the PR MECHA ASY, and slide the CO SW ASY backward. Then release the rear tab to remove the CO SW ASY. See arrows **5)-1** and **5)-2** in Figure 4-21.
6. Remove the CO SW ASY from the CO SW HOLDER.

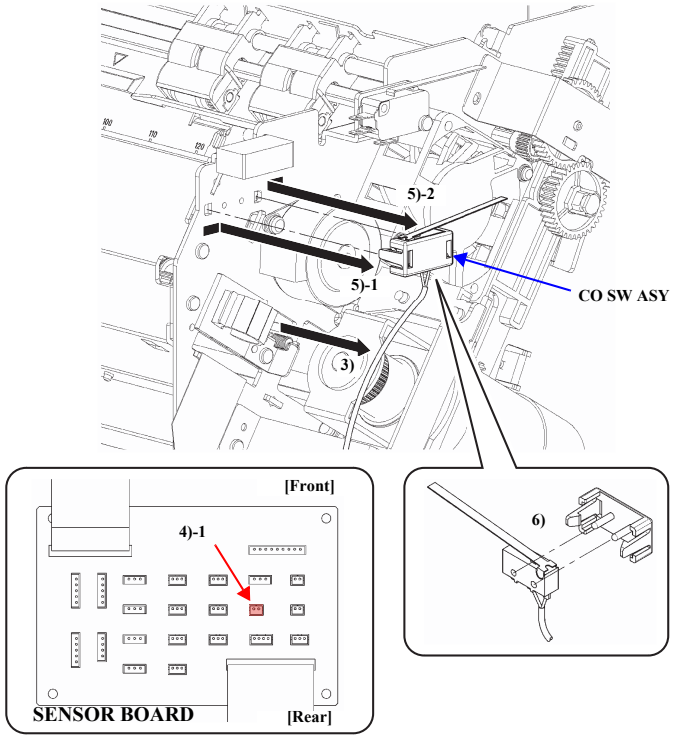

Figure 4-21. CO SW ASY Removal

Replacing INLK SW ASY / CO SW ASY

CHECK POINT

The plastic gutter is attached to both the INLK SW ASY and the CO SW ASY, as shown in Figure 4-22.

When replacing the INLK SW ASY or the CO SW ASY, carefully peel the plastic gutter off from the switch body, and attach it to a replacement switch unit. (If necessary, remove the double-sided adhesive tape from the plastic gutter, and attach the new one for better adhesion to the switch body and the mechanism.)

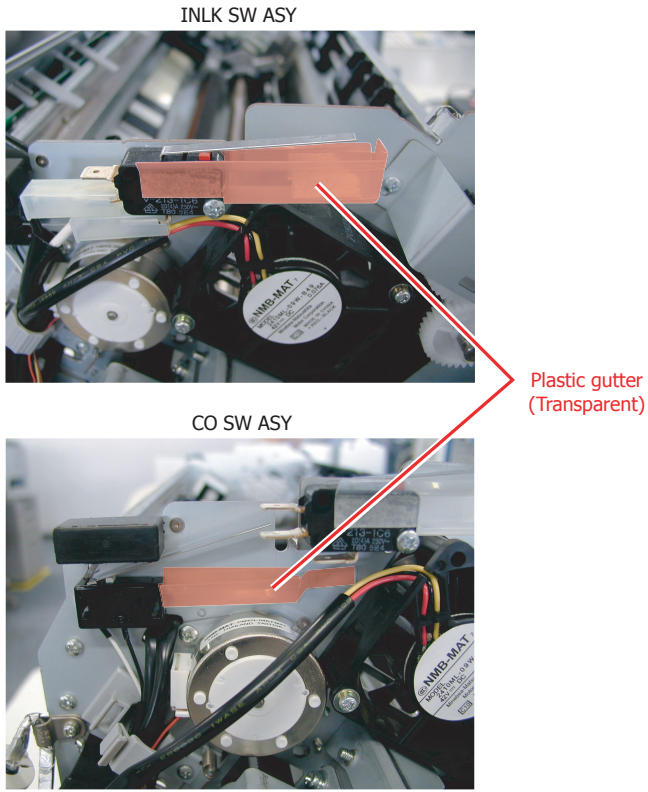

Figure 4-22. Plastic gutters

4.2.4 Printer mechanism

4.2.4.1 PR MECHA ASY

WARNING

- Do not touch the motors immediately after using the printer, or you may burn your hand. Allow the motors to cool enough to work with them.
- Be careful with the edges of the shield plate: they are very sharp.

1. Remove the UPPER UNIT (p. 135)
2. Lift one side of the PR MECHA ASY in the direction of the arrows shown in Figure 4-23 holding the two rear lift handles, and keep the PR MECHA ASY tilted up using the tilt bar.

CAUTION

- When using the tilt bar, be careful not to let the tilt bar interfere with the cables.
- Lift the PR MECHA ASY with great care so that the plastic lift handles do not come off the side frames.

3. Remove the C.B.S. 3 × 8 screw that secures the clamp for the OP CABLE to the SIDE FRAME, RIGHT, and release the OP CABLE.

CAUTION

Handle the OP CABLE with care. It is shielded, and two ferrite cores are attached to it for electromagnetic interference prevention.

Reassembly

When attaching the OP CABLE, install the clamp to the cable at the position shown in Figure 4-23 before fastening the clamp and OP CABLE to the SIDE FRAME, RIGHT.

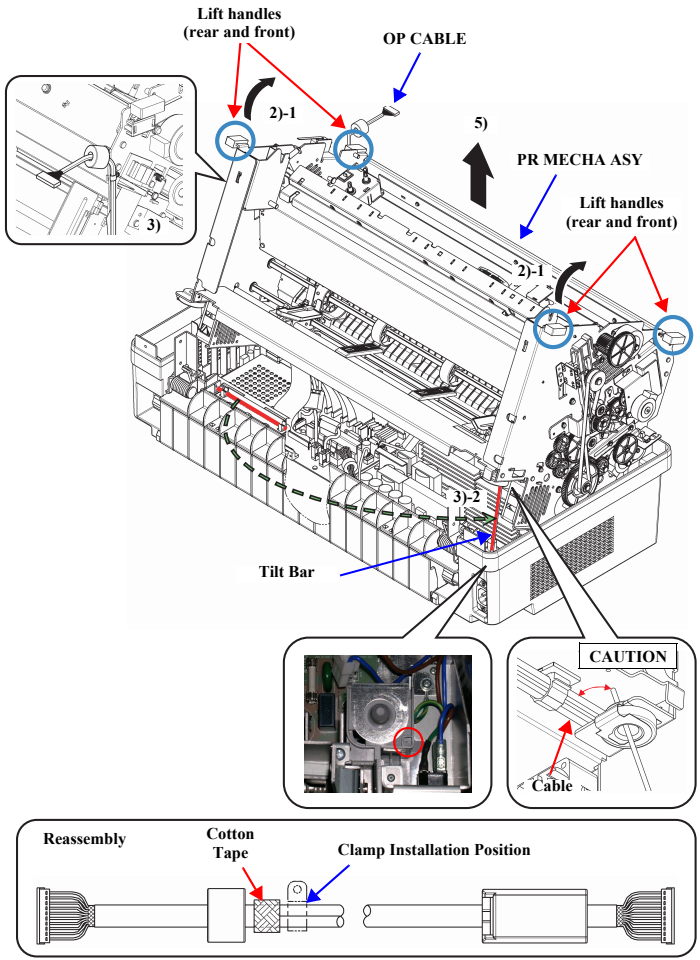

Figure 4-23. PR MECHA ASY Removal (1)

4. Disconnect the cables shown in Figure 4-24 from the ROM BOARD.

Connector	Pins	Color	Connects to / Function
CNRHD1	22	White	Carrier PCB (Front PRINT HEAD L, R) (Rear PRINT HEAD L, R)
CNRHD2	22	White	
CNFHD1	22	White	
CNFHD2	22	White	
CNHD3	22	White	Carrier PCB (Sensor)
CNSEN1	28	White	SENSOR BOARD UNIT
CNSEN2	26	White	SENSOR BOARD UNIT
CNSPHS	7	White	SP MOTOR IC
CNSPM	3	White	SP MOTOR
CNINLK	4	White	INLK SW
CNLF	6	White	LF MOTOR

5. To remove the PR MECHA ASY, grab either pair of opposite corner lift handles, and lift it straight up.

CAUTION

Lift the PR MECHA ASY with great care so that the plastic lift handles do not come off the side frame.

Reassembly

- Reconnect all connectors securely.
- Tuck the cables into the PR MECHA ASY properly so that they are not caught on the PR MECHA ASY. Make sure the ferrite core does not put pressure on parts around it.

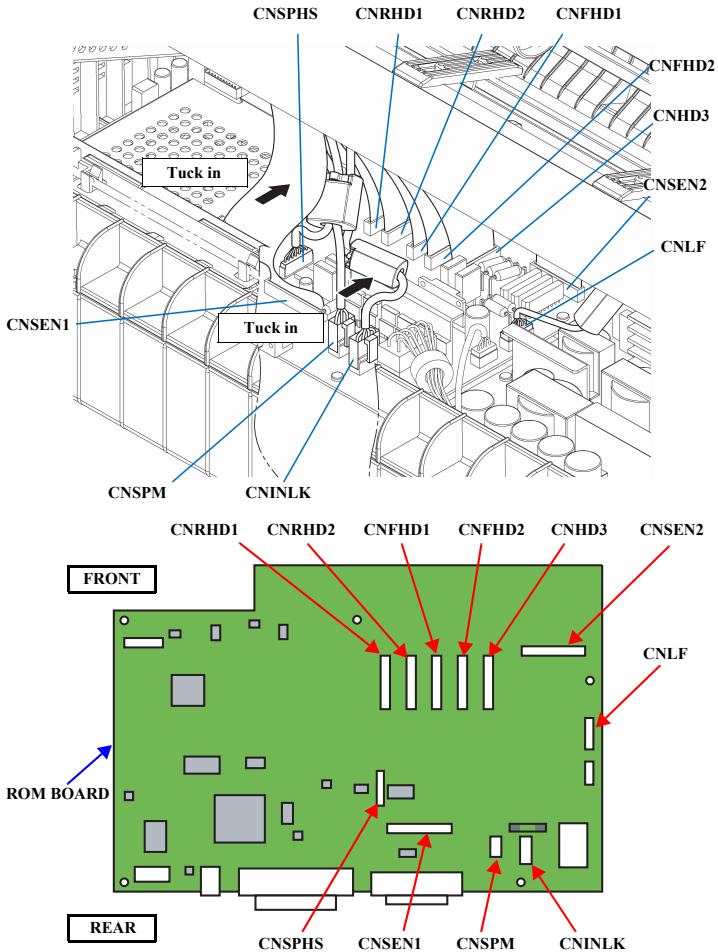

Figure 4-24. PR MECHA ASY Removal (2)

The following adjustments are required after replacing the PR MECHA ASSY.

1. APTC thickness detection adjustment (p. 238)
2. APTC detection position adjustment (p. 241)
3. Top margin adjustment (p. 245)
4. Left margin adjustment (p. 247)
5. Bi-D adjustment (p. 250)

4.2.4.2 PRINT HEAD

WARNING

Do not touch the PRINT HEAD immediately after using the printer, or you may burn your hand. Allow the head to cool enough to work with it.

1. Open the TOP COVER of the UPPER UNIT.
2. Remove the two C.P. (S-P1) 4 × 12 screws that secure the PRINT HEAD to the CARRIER UNIT.
3. Slide the PRINT HEAD toward you to disengage the two positioning pins, then lift the PRINT HEAD straight up slowly to remove it while disconnecting it from the connector on the CARRIER UNIT.

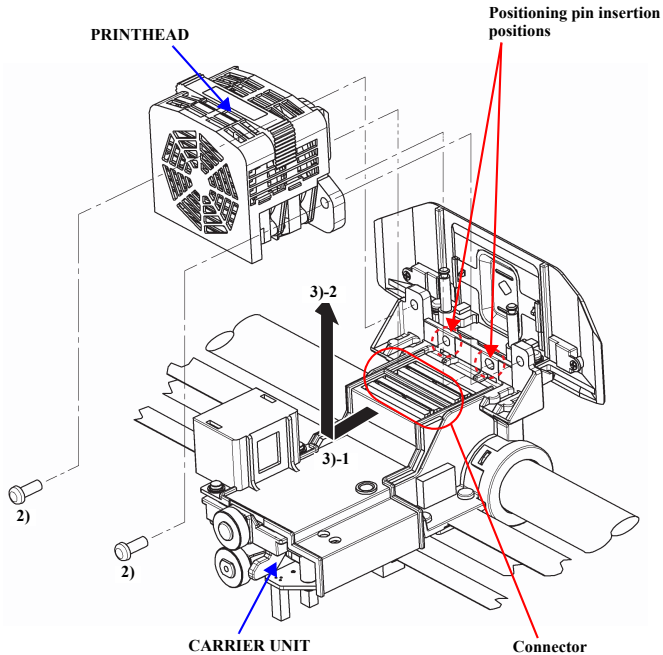

Figure 4-25. PRINT HEAD Removal

4.2.4.3 CARD GUIDE ASY

1. Remove the UPPER UNIT (p. 135)
2. Remove the PRINT HEAD (p. 152)
3. Remove the two C.P. (S-P1) 2.5 × 8 and one C.F. 2.5 × 6 screws that secure the Carrier holder to the CARRIER UNIT using the Phillips No.1 screwdriver.
4. Lift the front side of the carrier holder upward. Disconnect the CARRIER CABLE UNIT from the connector on the Carrier PCB, and remove the Carrier holder.

CAUTION

Be careful not to damage the CARRIER CABLE UNIT when removing the Carrier holder.

5. Match the center of the CARRIER UNIT with the ▽-mark on the Paper eject unit.
6. Remove the two C.P. (S-P1) 3 × 8 screws that secure the CARD GUIDE ASSY, and disconnect the right and left TOF sensor cables from the connectors on the Carrier PCB.
7. Remove the CARD GUIDE ASY upward, while slowly pulling the two TOF sensor cables out through the square holes in the CARRIER UNIT.

CAUTION

- Be careful not to damage the TOF sensor cables when drawing them through the square holes.
- When reconnecting the TOF sensor cables to the PCB connectors, connect them properly taking care not to damage the exposed metal conductors.

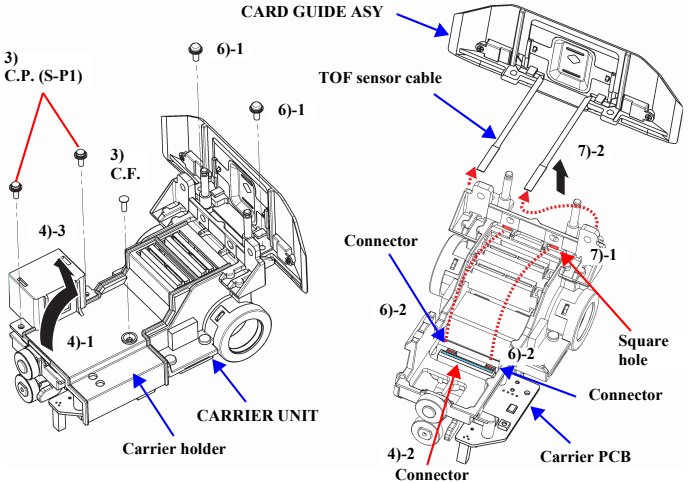

Figure 4-26. CARD GUIDE ASY Removal

Reassembly

- When installing the Carrier holder, replace the cable protector correctly in the CARRIER UNIT. See Figure 4-27.
- When installing the CARD GUIDE ASY, thread the TOF sensor cables as shown in Figure 4-28.
- Connect the two TOF sensor cables to the PCB connectors, observing their orientation with reference to Figure 4-28. Top side: the side covered with an insulating and reinforcing strip. Bottom side: exposed metal conductors.

ADJUSTMENT REQUIRED

Be sure to perform the following adjustments after removing or replacing the CARD GUID ASY.

1. Card guide mount position adjustment (p. 227)
2. TOF sensor sensitivity adjustment (p. 235)

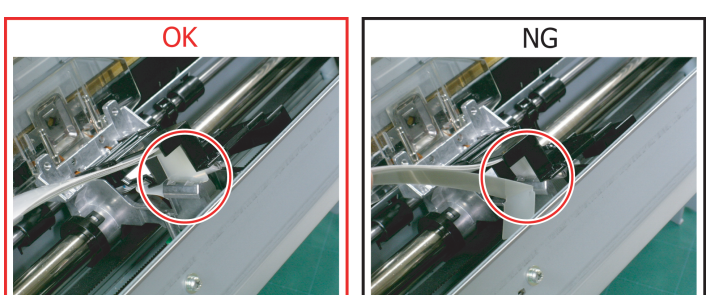

Figure 4-27. Cable Cover position during carrier holder reassembly.

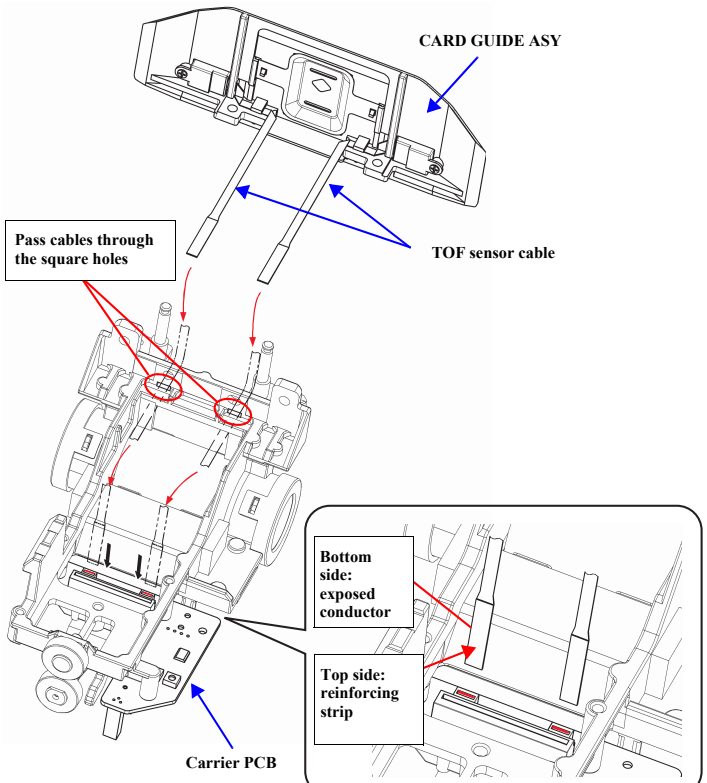

Figure 4-28. TOF Sensor Cable Reassembly

Ribbon MASK

1. Remove the PRINT HEAD (p. 152)
2. Slowly bow toward you the left end of the Ribbon MASK as shown in Figure 4-29. Release the Mask from the guide slot and pin that secure the MASK to the left side of the CARD GUIDE ASY.
3. Release the MASK from the right guide slot and pin, and remove the ribbon MASK.

Reassembly

Install the MASK as shown in Figure 4-30 by sliding it down into the guide slots on both sides until the pins lock it in place.

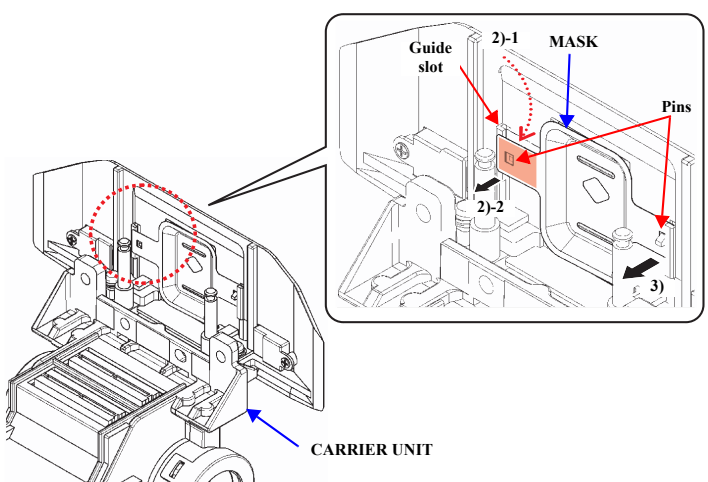

Figure 4-29. MASK removal

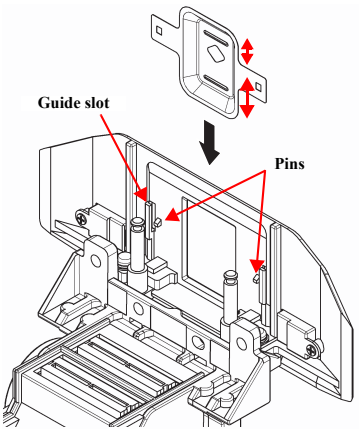

Figure 4-30. MASK installation

4.2.4.4 SP MOTOR ASY

WARNING

Do not touch the SP MOTOR ASY immediately after using the printer, or you may burn your hand. Allow the motor assembly to cool enough to work with it.

1. Remove the UPPER UNIT (p. 135)
2. Tilt up the rear of the PR MECHA ASY and support it using the tilt bar. Refer to section 4.2.4.1 PR MECHA ASY, p. 149.
3. Disconnect the SP MOTOR ASY cable from the connectors on the ROM BOARD (CNSPM: 3 pins, CNSPHS: 7 pins). See Figure 4-31.
4. Release the SP MOTOR ASY cable from the cable clamp on the bottom rear of the printer, and pull the cable out through the hole in the SIDE FRAME, RIGHT.
5. Remove the two C.B.S. 3 × 6 screws that secure the FAN3 MOTOR, and remove it.
6. Remove the two C.B.S. 3 × 8 screws that secure the Stopper BR to the SIDE FRAME, RIGHT, and remove the Stopper BR.

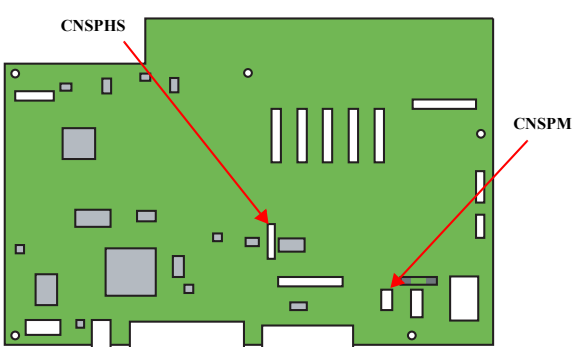

Figure 4-31. SP MOTOR ASY connectors on the ROM BOARD

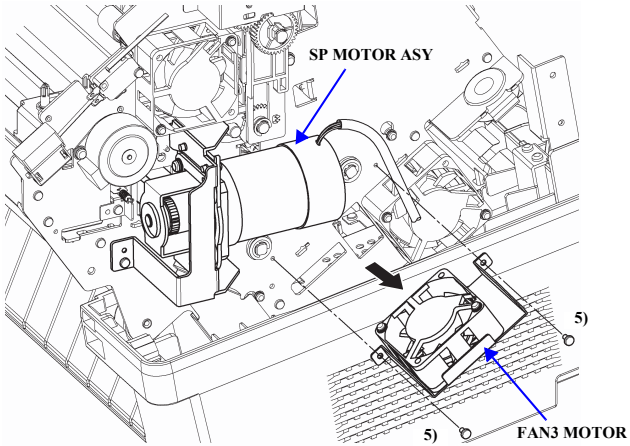

Figure 4-32. SP MOTOR ASY Removal (1)

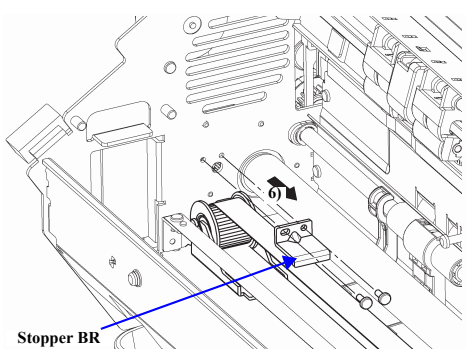

Figure 4-33. SP MOTOR ASY Removal (2)

7. Remove the three C.P. (S-P1) 4 × 10 screws that secure the SP MOTOR ASY to the bracket of the SIDE FRAME, RIGHT.

8. Tilt the rear of the SP MOTOR ASY to the right, and lift the Tension pulley to remove the SP MOTOR ASY together with the SP BELT.

CAUTION

When you remove the Tension pulley, be careful not to lose the washer on the inner shaft. It comes off easily.

9. Remove the four C.P. (S-P1) 4 × 10 screws that secure the SP MOTOR, Motor base, and Motor bracket, and remove the SP MOTOR.

ADJUSTMENT REQUIRED

Be sure to perform the following adjustments after replacing the SP MOTOR.

1. CR Drive Belt Tension Adjustment
2. Bi-D Adjustment

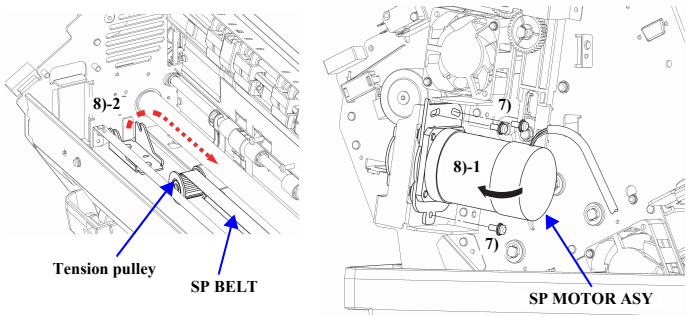

Figure 4-34. SP MOTOR ASY Removal (3)

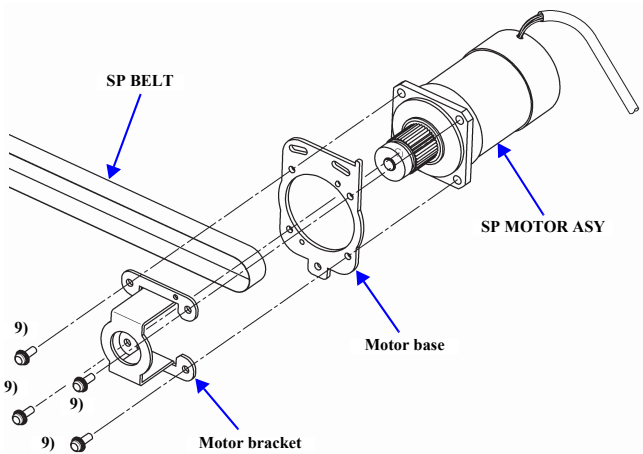

Figure 4-35. SP MOTOR ASY Removal (4)

4.2.4.5 SP BELT

CAUTION

The Carrier PCB and a ferrite core is attached are attached to the CARRIER UNIT. Handle them with care when removing or replacing the SP BELT.

1. Remove the SP MOTOR ASY (p. 156)
2. Remove the two C.B.S. 3 × 6 screws that secure the BELT clamp that fastens the SP BELT to the CARRIER UNIT, and remove the SP BELT.

CAUTION

- When removing or installing the SP BELT, be careful not to damage the CES SCALE.
- When installing the SP BELT, be careful not to separate the CES SCALE from the CES sensor.

ADJUSTMENT REQUIRED

Be sure to perform the CR drive belt (SP BELT) tension adjustment (p. 220) after removing or replacing the SP BELT.

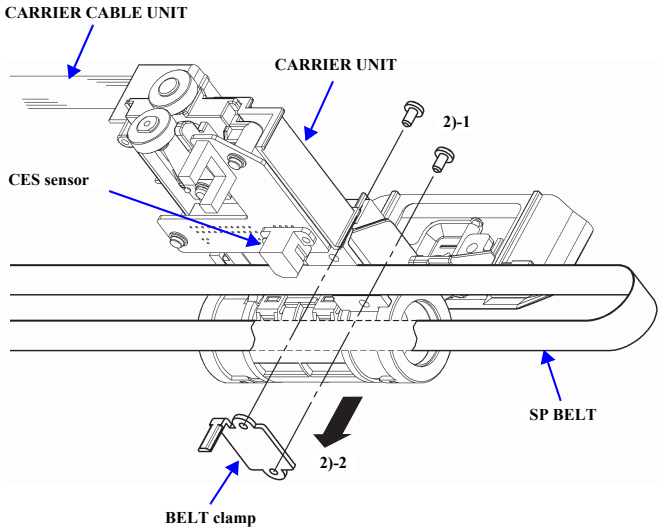

Figure 4-36. SP BELT Removal

4.2.4.6 CES SCALE

WARNING

Do not touch the PRINT HEAD immediately after using the printer, or you may burn your hand. Allow the head to cool enough to work with it.

1. Remove the UPPER UNIT (p. 135)
2. Tilt up the rear of the PR MECHA ASY and keep it in place with the tilt bar. Refer to section 4.2.4.1 PR MECHA ASY, p. 149.
3. Release the Tension Spring, located at the right end of the CES SCALE, from the tab on the SIDE FRAME, RIGHT, and release the CES SCALE.

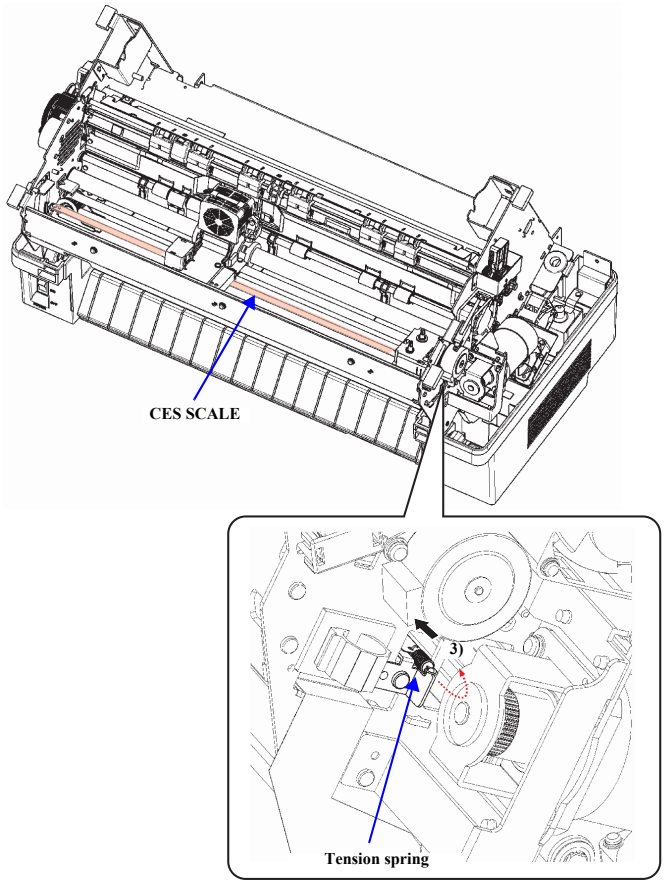

Figure 4-37. CES SCALE Removal (1)

4. Remove the C.B.S. 3 × 6 screw that secures the left end of the CES SCALE to the inside of the SIDE FRAME, LEFT, and slowly pull the CES SCALE out from the CES sensor on the bottom of the CARRIER UNIT.

Reassembly

- Attach the left end of the CES SCALE to the inside of the SIDE FRAME, LEFT with the ▲ mark facing the interior of the printer, as shown in Figure 4-38.
- Make sure that the CES SCALE passes through the slit in the CES sensor.
- Match the positioning dowel on the SIDE FRAME, LEFT with the positioning hole of the CES SCALE.

CAUTION

When placing the CES SCALE inside the CES sensor, take care not to bend or damage the CES SCALE.

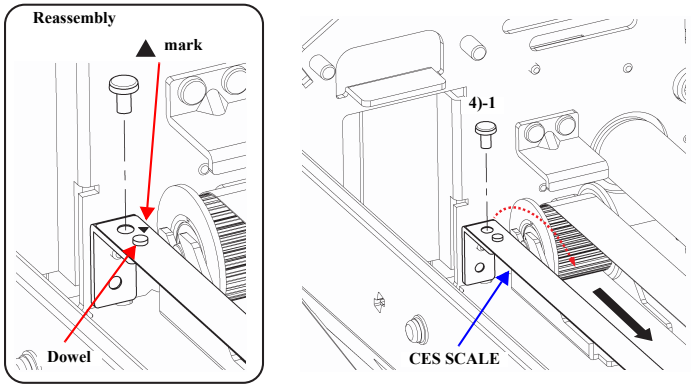

Figure 4-38. CES SCALE Removal (2)

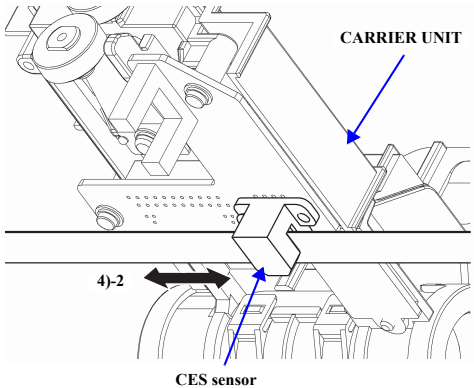

Figure 4-39. CES SCALE Removal (3)

4.2.4.7 LF MOTOR

WARNING

Do not touch the LF MOTOR immediately after using the printer, or you may burn your hand. Allow the motor to cool enough to work with it.

1. Remove the PR MECHA ASY (p. 149)
2. Release the LF MOTOR cable from the three cable clamps on the bottom rear of the PR MECHA ASY.
3. Match the screw access hole in the Pulley Gear to the screw location for the LF MOTOR. Remove the two C.P. (S-P1) 4 × 10 screws that secure the LF MOTOR to the SIDE FRAME, LEFT, and remove the LF MOTOR.

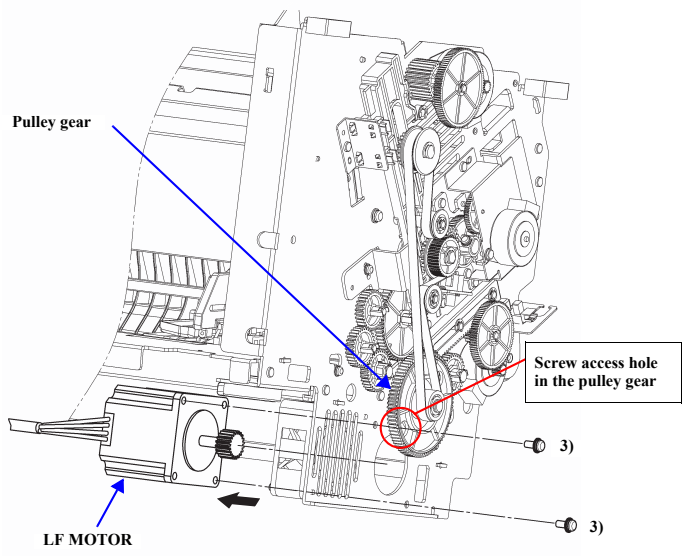

Figure 4-40. LF MOTOR Removal

4.2.4.8 LF BELT

1. Remove the UPPER UNIT (p. 135)
2. Tilt up the rear of the PR MECHA ASY and support it using the tilt bar. Refer to section 4.2.4.1 PR MECHA ASY, p. 149.
3. Loosen the screw that secures the Tension pulley unit to the SIDE FRAME, LEFT. Slide the Tension pulley unit in the direction of the arrow (downward) to release the tension of the LF BELT, and then remove the LF BELT.

Reassembly

When installing the Tension pulley unit, match the positioning hole of the Tension pulley unit with the dowel.

ADJUSTMENT REQUIRED

Be sure to perform the LF drive belt tension adjustment (p. 222) after removing or replacing the LF BELT.

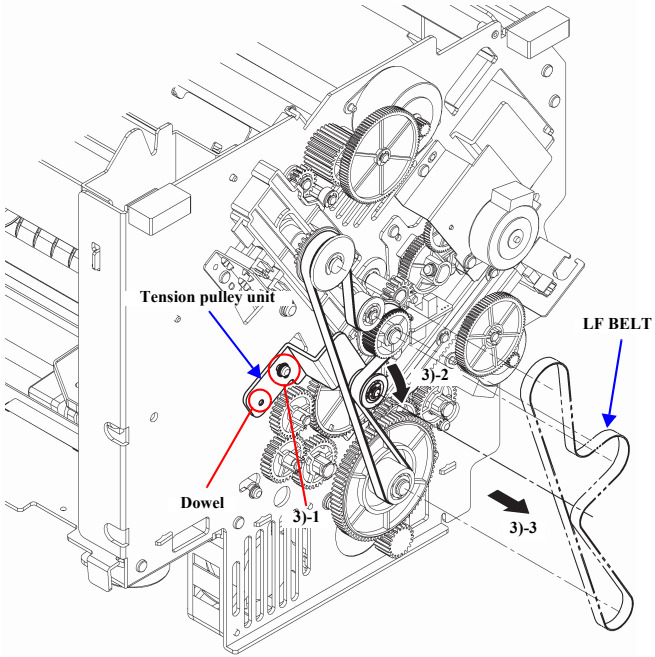

Figure 4-41. LF BELT Removal

4.2.4.9 RF MOTOR

WARNING

Do not touch the RF MOTOR immediately after using the printer, or you may burn your hand. Allow the motor to cool enough to work with it.

1. Remove the UPPER UNIT (p. 135)
2. Tilt up the rear of the PR MECHA ASY and support it using the tilt bar. Refer to section 4.2.4.1 PR MECHA ASY, p. 149.
3. Release the RF MOTOR cable from the three cable clamps (SIDE FRAME, RIGHT: 2 places, bottom rear: 1 place).
4. Release the RF MOTOR cable from the SENSOR BOARD UNIT (CNRB: 4 pins), and pull the RF MOTOR cable out through the hole in the SIDE FRAME, RIGHT.
5. Remove the two C.B.S. 3 × 6 screws that secure the RF MOTOR to the SIDE FRAME, RIGHT, and remove the RF MOTOR.

Reassembly

When installing the RF MOTOR, take care not to damage the pinion gear attached to the motor when you pass it through the hole in the side frame.

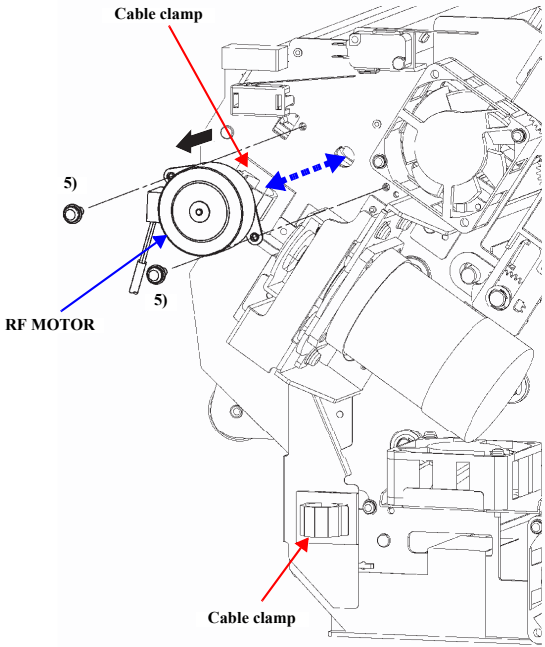

Figure 4-42. RF MOTOR Removal

4.2.4.10 RF UNIT

WARNING

Do not touch the RF MOTOR immediately after using the printer, or you may burn your hand. Allow the motor to cool enough to work with it.

1. Remove the UPPER UNIT (p. 135)
2. Tilt up the rear of the PR MECHA ASY and support it using the tilt bar. Refer to section 4.2.4.1 PR MECHA ASY, p. 149.
3. Remove the two C.B.S. 3 × 6 screws that secure the RF MOTOR to the SIDE FRAME, RIGHT, and release the RF MOTOR.

CHECK POINT

When removing the RF MOTOR from the SIDE FRAME, RIGHT, leave the RF MOTOR cable secured by the clamp and connected to the SENSOR BOARD UNIT.

4. Release the RF UNIT cable from the three cable clamps (SIDE FRAME, RIGHT: 2 places, bottom rear: 1 place).
5. Disconnect the RF UNIT cables from the SENSOR BOARD UNIT (CNRFS: 3 pins, CNRMS: 2 pins), and pull the RF UNIT cables out through the hole in the SIDE FRAME, RIGHT.

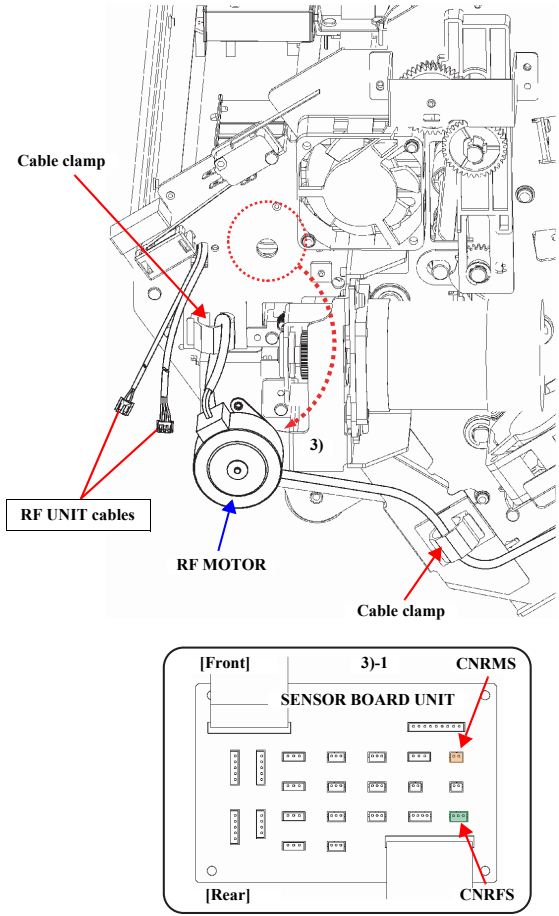

Figure 4-43. RF UNIT Removal (1)

6. Remove the C.B.S. 3 × 6 screw that secures the RF UNIT to the SIDE FRAME, RIGHT, and remove the RF UNIT while slowly feeding the cables through the SIDE FRAME, RIGHT. The connectors on the end of the cables will fit through the hole one-at-a-time.

CAUTION

When removing or installing the RF UNIT, be careful not to damage the RF UNIT cables.

Reassembly

When installing the RF UNIT, match the positioning holes of the RF UNIT with the pins on the inside of the SIDE FRAME, RIGHT.

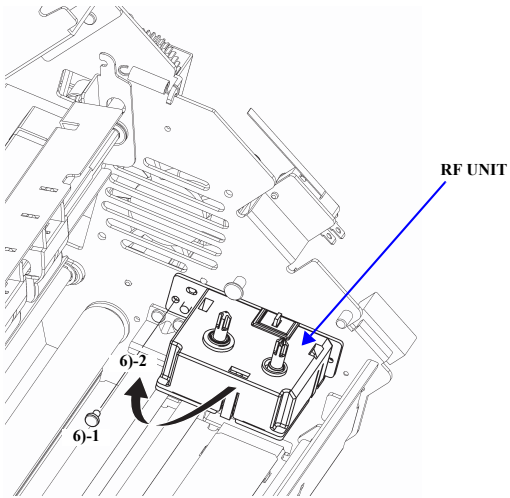

Figure 4-44. RF UNIT Removal (2)

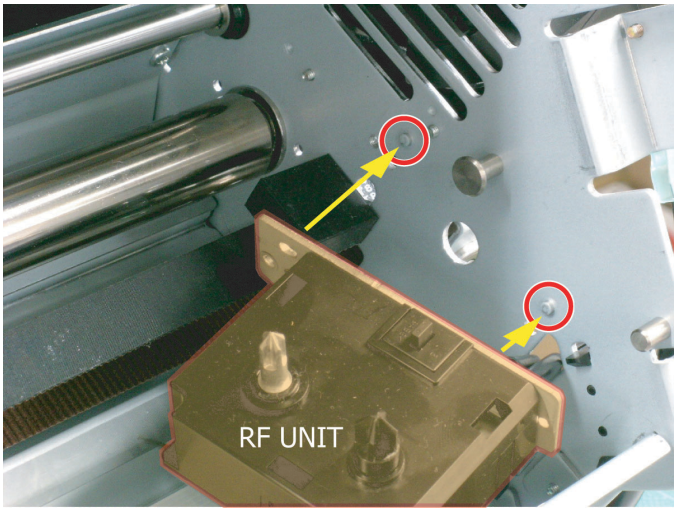

Figure 4-45. Reinstalling the RF UNIT

4.2.4.11 OC MOTOR

WARNING

Do not touch the OC MOTOR immediately after using the printer, or you may burn your hand. Allow the motor to cool enough to work with it.

1. Remove the UPPER UNIT (p. 135)
2. Tilt up the rear of the PR MECHA ASY and support it using the tilt bar. (Refer to section 4.2.4.1 PR MECHA ASY, p. 149.)
3. Release the OC MOTOR cable from the three cable clamps on the bottom rear of the PR MECHA ASY.
4. Disconnect the OC MOTOR cable from the SENSOR BOARD UNIT (CNO/C: 5 pins), and pull the OC MOTOR cable out through the hole of the SIDE FRAME, LEFT.
5. Release the OC MOTOR cable from the retaining tab on the HCPP SENSOR UNIT and the cable clamp on the SIDE FRAME, LEFT.
6. Remove the two C.P. (S-P1) 3 × 6 screws that secure the OC MOTOR to the SIDE FRAME, LEFT, and remove the OC MOTOR while sliding it so as not to interfere with the front gear.

CAUTION

When removing or installing the OC MOTOR, be careful not to damage the front gear.

Reassembly

After installing the OC MOTOR, confirm that the CR MOTOR pinion gear is securely engaged with the front gear.

ADJUSTMENT REQUIRED

Be sure to lubricate the OC gear and stud after removing or replacing the OC MOTOR. See Figure 6-3. Lubrication Point 3 (p.262)

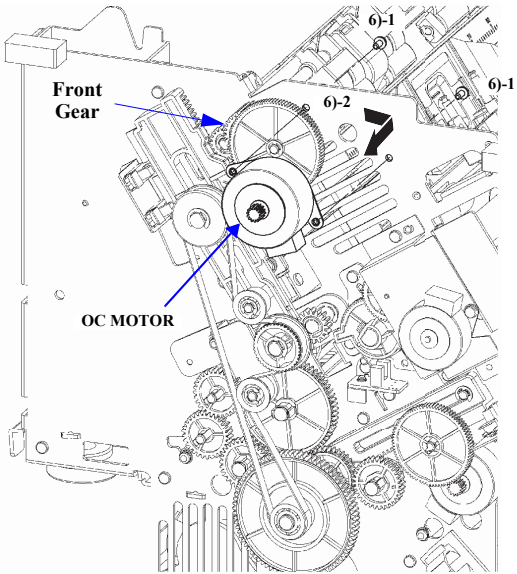

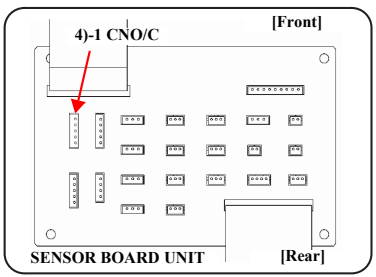

Figure 4-46. OC MOTOR Removal

4.2.4.12 HCPP MOTOR

WARNING

Do not touch the HCPP MOTOR immediately after using the printer, or you may burn your hand. Allow the motor to cool enough to work with it.

1. Remove the UPPER UNIT (p. 135)
2. Tilt up the rear of the PR MECHA ASY and support it using the tilt bar. (Refer to section 4.2.4.1 PR MECHA ASY, p. 149.)
3. Release the HCPP MOTOR cable from the three cable clamps on the bottom rear of the PR MECHA ASY.
4. Disconnect the HCPP MOTOR cable from the SENSOR BOARD UNIT (CNHCPP: 5 pins), and pull the HCPP MOTOR cable out through the hole in the SIDE FRAME, LEFT.
5. Release the HCPP MOTOR cable from the cable clamp on the SIDE FRAME, LEFT.
6. Remove the two C.P. (S-P1) 3 × 6 screws that secure the HCPP MOTOR to the SIDE FRAME, LEFT, and remove the HCPP MOTOR while sliding it so as not to interfere with the front gear.

CAUTION

- When removing or installing the HCPP MOTOR, be careful not to damage the front gear.
- After installing the HCPP MOTOR, confirm that the HCPP MOTOR pinion gear is securely engaged with the front gear

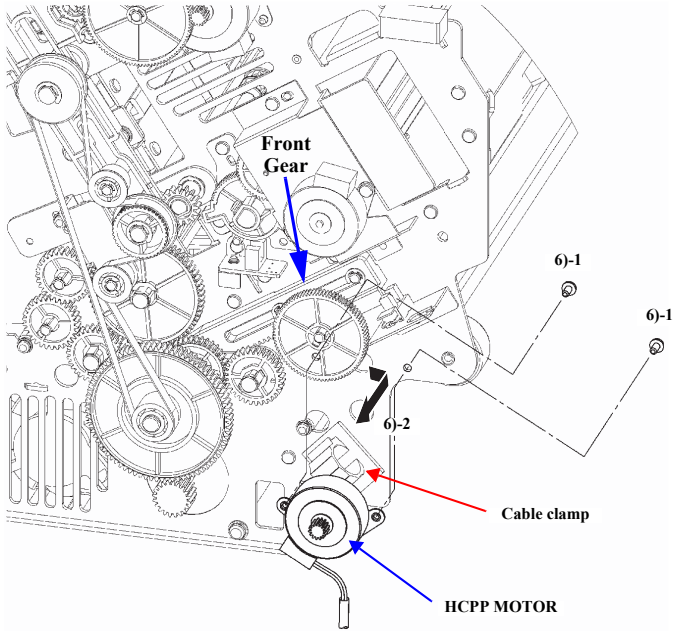

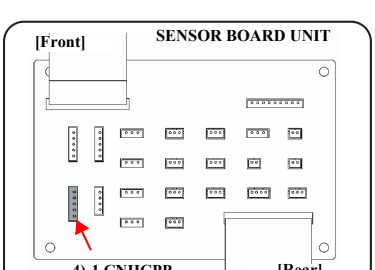

Figure 4-47. HCPP MOTOR Removal

4.2.4.13 APTC UNIT

1. Remove the UPPER UNIT (p. 135)
2. Tilt up the rear of the PR MECHA ASY and support it using the tilt bar. (Refer to section 4.2.4.1 PR MECHA ASY, p. 149.)
3. Release the APTC UNIT cable from the three cable clamps on the bottom rear of the PR MECHA ASY.
4. Disconnect the APTC UNIT cable from the SENSOR BOARD UNIT (CNAPTCS: 4 pins), and pull the APTC UNIT cable out through the hole in the SIDE FRAME, LEFT.
5. Slide the Slide Cam located on the SIDE FRAME, LEFT toward the Front Tractor.
6. Release the APTC UNIT cable from the cable retainer on the HCPP SENSOR UNIT and the cable clamp on the SIDE FRAME, LEFT.
7. Remove the two C.B.S. 3 × 6 screws that secure the APTC UNIT to the SIDE FRAME, LEFT, and remove the APTC UNIT.

Reassembly

When installing the APTC UNIT, match the positioning holes of the APTC UNIT with the dowels on the SIDE FRAME, LEFT.

ADJUSTMENT REQUIRED

After removing the APTC UNIT, be sure to perform the following maintenance and adjustments.

1. Lubrication on the gear shafts.
   Figure 6-11. Lubrication Point 11 (p.267)
2. LF Drive Belt Tension Adjustment (p. 222)
3. APTC thickness detection adjustment (p. 238)
4. APTC detection position adjustment (p. 241)

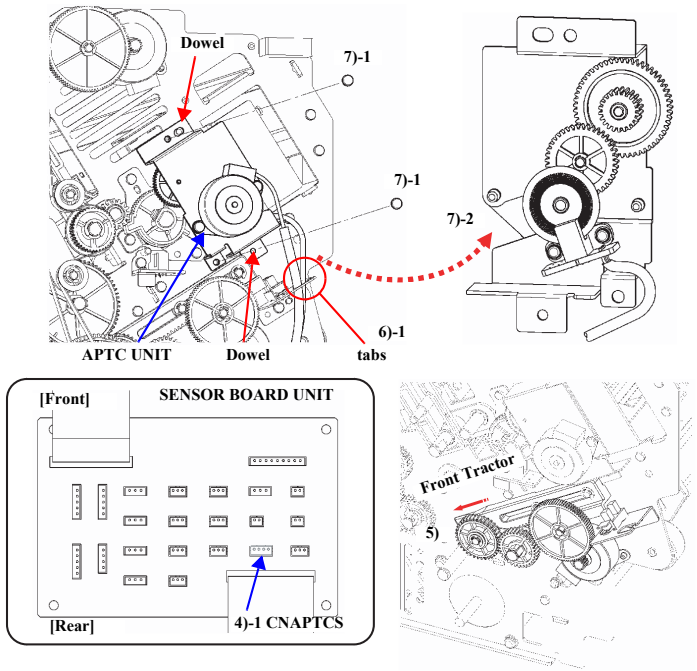

Figure 4-48. APTC UNIT Removal

4.2.4.14 TRACTOR UNIT

TRACTOR FL UNIT/TRACTOR FR UNIT

1. Remove the PR MECHA ASY (p. 149)
2. Position the Tractor locks of both the TRACTOR FL UNIT and TRACTOR FR UNIT at “FREE”.
3. Lift the two Center guides upward, and remove them from the Sub shaft and the Tractor shaft.

CHECK POINT

Since the TRACTOR FR UNIT (Front-Right tractor) is not equipped with a sensor, procedures 4 through 7 are not required when you remove only the TRACTOR FR UNIT.

4. Release the FTRPE sensor cable from the three cable clamps on the bottom rear of the printer.
5. Disconnect the FTRPE sensor cable from the SENSOR BOARD UNIT (CNFTRPES: 3 pins), and pull the FTRPE sensor cable out through the hole in the SIDE FRAME, LEFT.
6. Release the FTRPE sensor cable from the cable clamp on the outside of the SIDE FRAME, LEFT.
7. Pull the FTRPE sensor cable inside the frame through the hole in the SIDE FRAME, LEFT, and then release the FTRPE sensor cable from the clamp on the inside of the SIDE FRAME, LEFT.

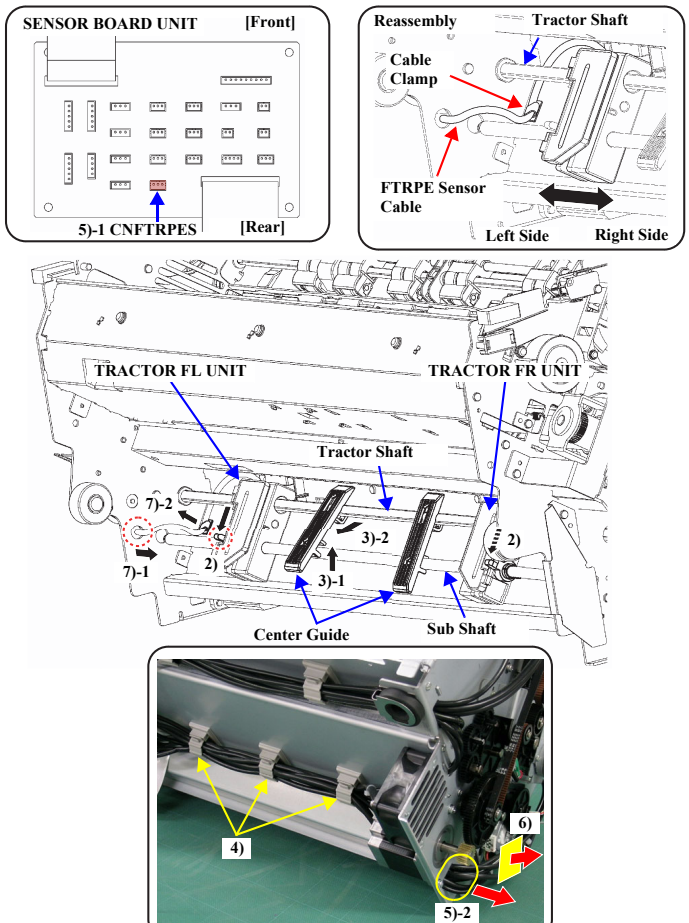

Figure 4-49. TRACTOR FL UNIT/TRACTOR FR UNIT Removal (1)

Reassembly

Secure the FTRPE sensor cable with the cable clamps, making length adjustments to meet the following conditions:

- Too much tension should not be applied to the cable when moving the TRACTOR FL UNIT to the right.
- The cable should not interfere with the Tractor shaft when moving the TRACTOR FL UNIT to the left.

8. Remove the two C.P. (S-P1) 3 × 10 screws that secure the Sub shaft, move the Sub shaft to the recess holes on the SIDE FRAME, LEFT and SIDE FRAME, RIGHT, and then pull out the Sub shaft.
9. Remove the E-ring that secures the right end of the Tractor shaft, and remove the washer, spring washer, and the bearing.

Reassembly

When installing the Tractor shaft, attach the spring washer in the direction shown in Figure 4-50, Reassembly (A). Place the Spring Washer with the bow facing the center of the tractor shaft.

10. Pull out the Tractor shaft to the left.

Reassembly

The TRACTOR FL UNIT and TRACTOR FR UNIT have phases that must be matched. Align the phase marks of the TRACTOR FL UNIT and TRACTOR FR UNIT before installing the Tractor shaft. See Figure 4-50, Reassembly (B).

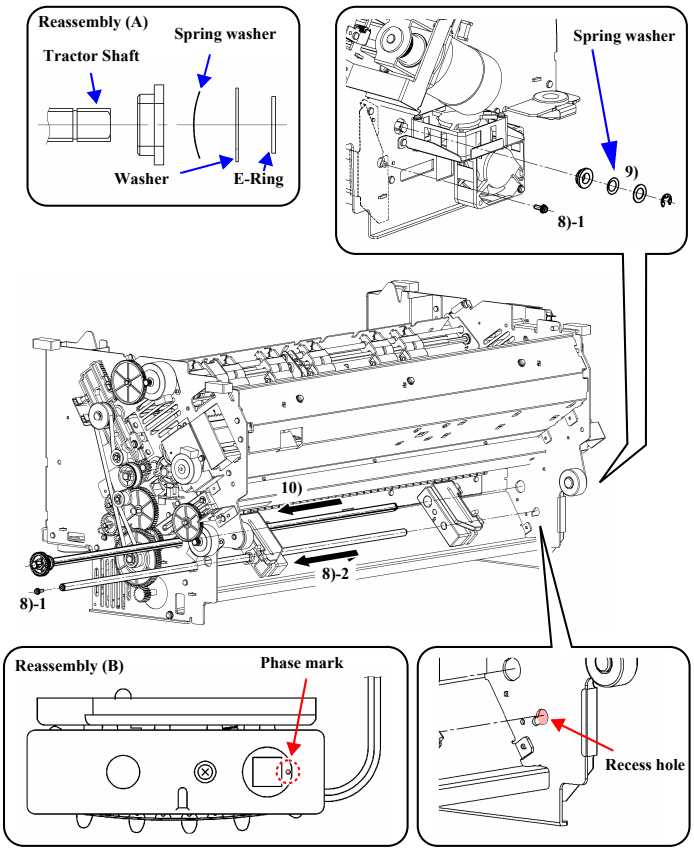

Figure 4-50. TRACTOR FL UNIT/TRACTOR FR UNIT Removal (2)

TRACTOR RL UNIT/TRACTOR RR UNIT

1. Remove the PR MECHA ASY (p. 149)
2. Remove the SP MOTOR ASY (p. 156)
3. Remove the FAN3 MOTOR. See FAN MOTORS (FAN1 MOTOR to FAN4 MOTOR) (p. 208)
4. Position the Tractor locks of both the TRACTOR FL UNIT and TRACTOR FR UNIT at “FREE”.

CHECK POINT

Since the TRACTOR RR UNIT is not equipped with a sensor, procedures 5 through 7 are not required when you remove only the TRACTOR RR UNIT.

5. Release the RTRPE sensor cable from the two cable clamps on the bottom rear of the printer.
6. Disconnect the RTRPE sensor cable from the SENSOR BOARD UNIT (CNFTRPES: 3 pins), and pull the RTRPE sensor cable through the hole near the bottom on the SIDE FRAME, LEFT.
7. Pull the RTRPE sensor cable inside the printer through the hole in the SIDE FRAME, LEFT near the TRACTOR RL UNIT.

Reassembly

When you route the RTRPE sensor cable, make length adjustments as necessary to meet the following conditions:

- Minimal or no tension on the cable when the TRACTOR RL UNIT is moved to the extreme left.
- The cable must not interfere with the Tractor shaft when the TRACTOR RL UNIT is moved to the extreme right.

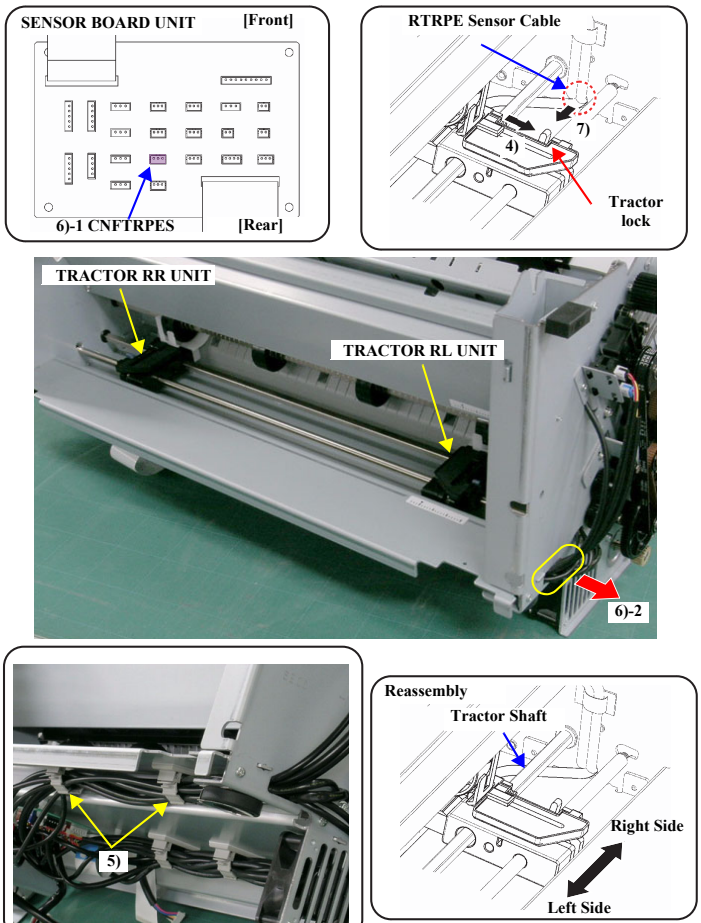

Figure 4-51. TRACTOR RL UNIT/TRACTOR RR UNIT Removal (1)

8. Remove the OC Slide Cam L. See 4.2.4.15 DV ROLLER UNIT (p.175).
9. Remove the E-ring that secures the Pulley Gear to the SIDE FRAME, LEFT, and remove the Pulley Gear.
10. Release the two tabs that secure TR Gear 2 to the SIDE FRAME, LEFT, and remove TR Gear 2 and the bearing.
11. Release the two tabs that secure TR Gear 3 to the SIDE FRAME, LEFT, and remove TR Gear 3 and the bearing.

Reassembly

The left and right R tractors, TR Gear 2, and TR Gear 3 have phases that must be matched. When installing TR Gear 2 and TR Gear 3, make sure the two tabs on the outside of the R tractor are horizontal, then attach TR Gear 2 and TR Gear 3 with their phases aligned. See the Reassembly diagram at the bottom of Figure 4-52.

12. Pull the two Tractor shafts out to the left together with the bearings.
13. Remove the two C.P. (S-P1) 3 × 10 screws that secure the Sub shaft, move it up to the recess holes of the SIDE FRAME, LEFT and SIDE FRAME, RIGHT, and then pull out the Sub shaft.

Reassembly

The TRACTOR RL UNIT and TRACTOR RR UNIT have phases that must be matched. Align the phase marks of the TRACTOR RL UNIT and TRACTOR RR UNIT before installing the Tractor shaft.

ADJUSTMENT REQUIRED

After removing the TRACTOR RL UNIT and TRACTOR RR UNIT, be sure to perform the CR drive belt (SP BELT) tension adjustment (p. 220).

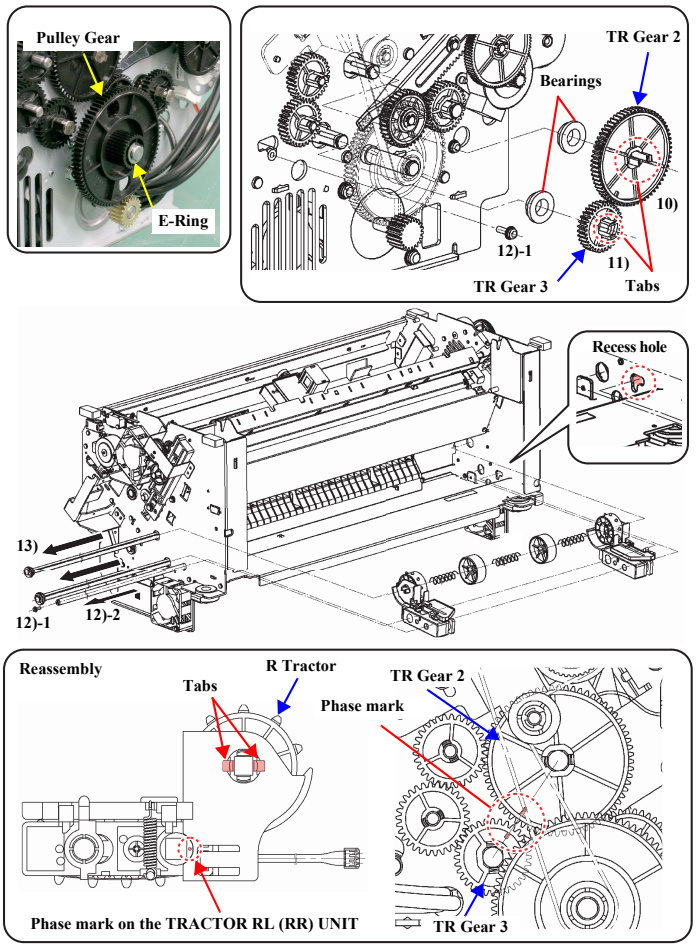

Figure 4-52. TRACTOR RL UNIT/TRACTOR RR UNIT Removal (2)

Reassembly

When reassembling the rear tractor assembly (TRACTOR RL UNIT, TRACTOR RR UNIT) and installing it to the printer mechanism, be sure to assemble whole parts; the springs and the guide wheels, to the Sub shaft, as shown in Figure 4-53.

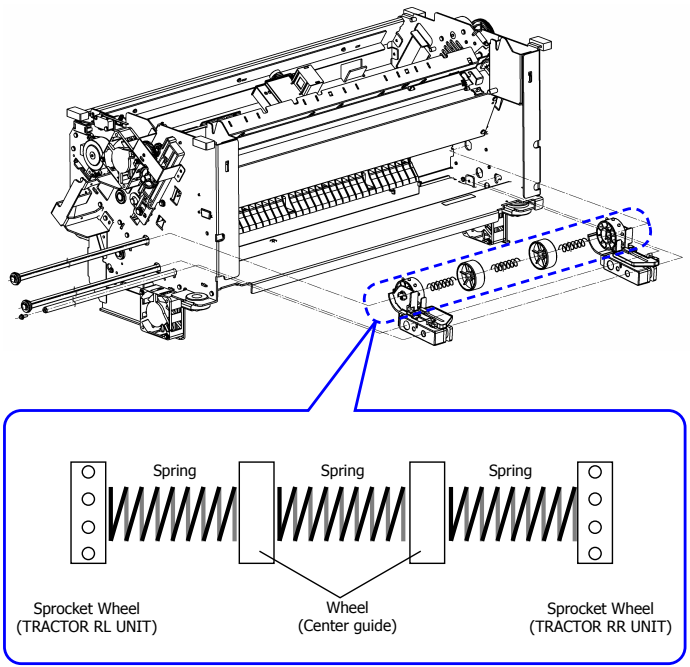

Figure 4-53. Reassembly of TRACTOR RL/RR UNIT

4.2.4.15 DV ROLLER UNIT

DV ROLLER F ASY

1. Remove the PR MECHA ASY (p. 149)
2. Remove the TPE HOLDER ASY (p. 201)
3. Remove the four screws that secure the Back stay ASY, and remove the PTRM SWITCH ASY together with the Back stay ASY. Refer to PTRM SWITCH ASY (p. 206)
4. Remove the three screws that secure the SP MOTOR ASY to the bracket of the SIDE FRAME, RIGHT, and release the SP MOTOR ASY. Refer to section 4.2.4.4 SP MOTOR ASY, p. 156.
5. Remove the C.P. (S-P1) 3 × 8 screw that secures the Tension pulley unit to the SIDE FRAME, LEFT, and remove the Tension pulley unit and the LF BELT. Refer to section 4.2.4.8 LF BELT, p. 162.
6. Remove the E-ring that secures the left end of the DV ROLLER ASY, and remove the Belt guide and the DV gear.
7. Remove the E-ring that secures the Tension pulley to the SIDE FRAME, LEFT, and remove the Tension pulley.

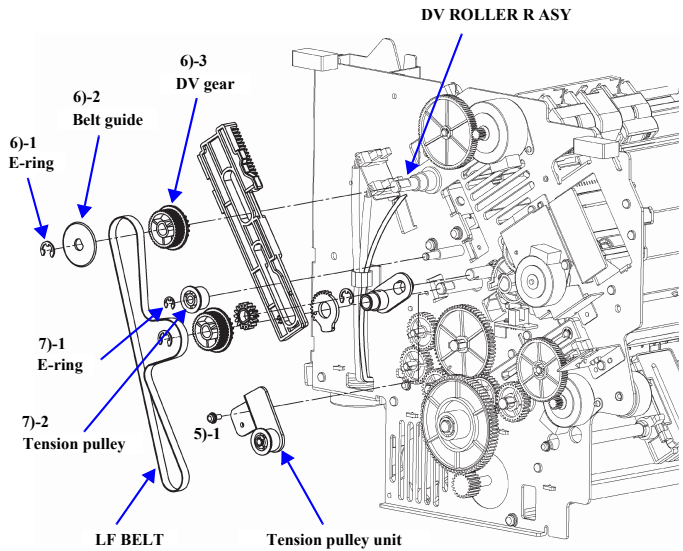

Figure 4-54. DV ROLLER F ASY Removal (1)

8. Remove the C.B.S. 3 × 6 screw that secures the OC SENSOR BR UNIT, and remove the OC SENSOR UNIT. (OC SENSOR BR UNIT (p. 204))

CAUTION

When removing the OC SENSOR BR UNIT, be careful not to interfere with the tabs on the bottom of the OC slide cam L that pass through the photo sensor.

9. Remove the E-ring that secures the left end of the DV ROLLER F ASY, and remove the DV gear.
10. Remove the Nip gear from the Nip roller shaft.
11. Remove the OC slide cam L, and remove the OC cam from the DV ROLLER F ASY.
12. Remove the E-ring that secures Bearing FL to the Nip roller shaft, and remove Bearing FL.

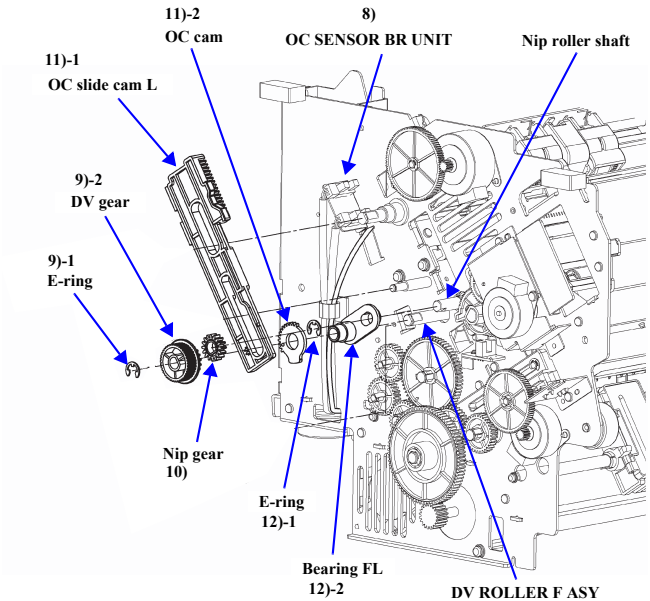

Figure 4-55. DV ROLLER F ASY Removal (2)

13. Remove the two C.B.S. 3 × 6 screws that secure the Nip bracket unit to the SIDE FRAME, RIGHT, and remove the Nip bracket unit.
14. Release the two tabs that secure the DV gear R to the right end of the DV ROLLER R ASY, and remove the DV gear R, spring washer, and washer.
15. Remove the E-ring that secures the right end of the DV ROLLER F ASY, and remove the washer and spring washer.
16. Remove OC slide cam R, and remove the OC cam and Bearing FR from the DV ROLLER F ASY.

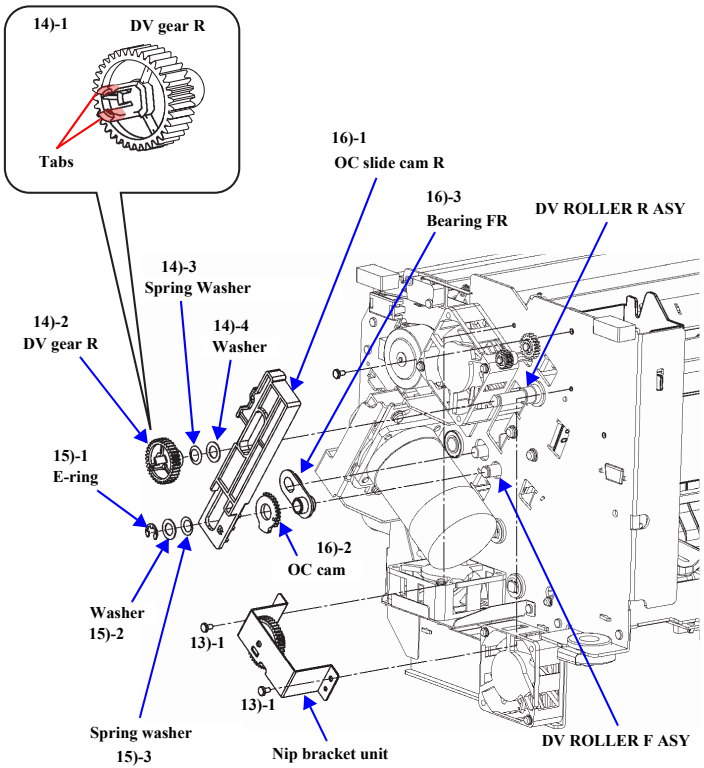

Figure 4-56. DV ROLLER F ASY Removal (3)

17. Remove the two C.B.S. 3 × 6 screws that secure the Lower guide F ASY to the SIDE FRAME, LEFT / RIGHT.

CHECK POINT

Remove only the two screws without removing the Lower guide F ASY.

18. Slide the DV ROLLER ASY to the left until the right side of the shaft clears the frame, then lift the right side of the shaft upward through the clearance in the Right side frame shown in Figure 4-58. Pull the left-side of the shaft out of the Left side frame to remove the DV ROLLER ASY.

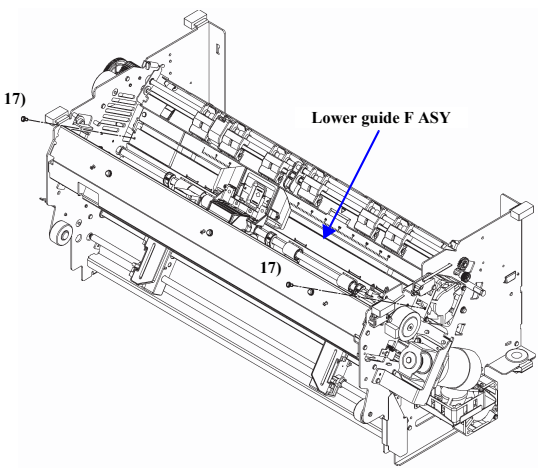

Figure 4-57. DV ROLLER F ASY Removal (4)

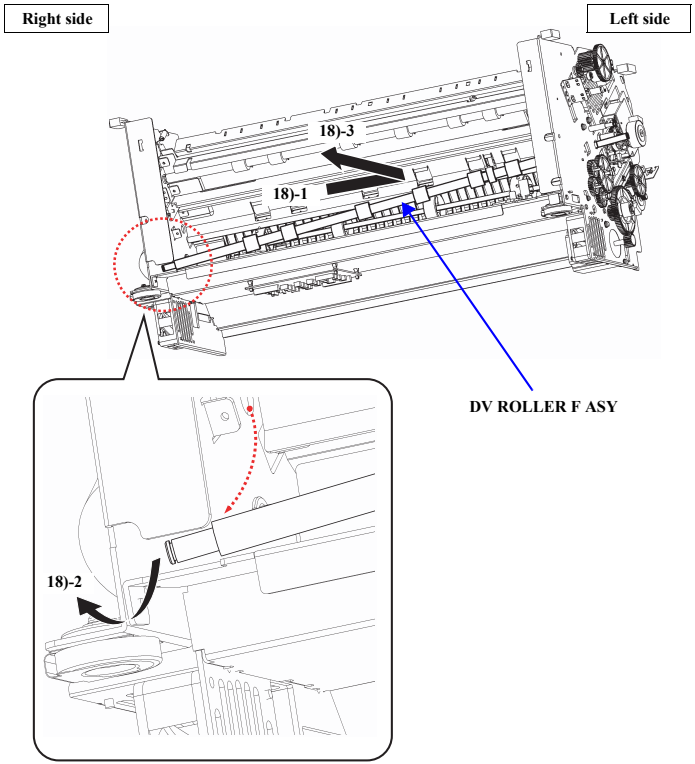

Figure 4-58. DV ROLLER F ASY Removal (5)

Reassembly

The OC slide cam L and OC cam, and the OC slide cam R and OC cam have phases that must be matched. Refer to the figure below and install these parts so that the center of the phase mark on the OC cam aligns with the window in the Left and Right OC slide cam, respectively.

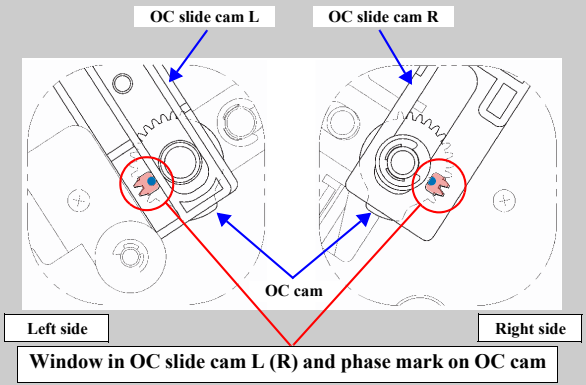

Figure 4-59. Reassembly the OC slide cam

ADJUSTMENT REQUIRED

Be sure to perform the following maintenance and adjustments after removing the DV ROLLER F ASY.

1. Lubricate the gear and bearing. See Chapter 6, Shafts, bearings and OC cam (p. 260), and Gears and slide cams (p. 261).
2. LF drive belt tension adjustment (p. 222)

DV ROLLER R ASY

1. Remove the PR MECHA ASY (p. 149)
2. Remove the TPE HOLDER ASY (p. 201)
3. Remove the four screws that secure the Back stay ASY, and remove the PTRM SWITCH ASY together with the Back stay ASY. See PTRM SWITCH ASY (p. 206).
4. Remove the three screws that secure the SP MOTOR ASY to the bracket of the SIDE FRAME, RIGHT, and release the SP MOTOR ASY. See SP MOTOR ASY (p. 156).
5. Remove the C.P. (S-P1) 3 × 8 screw that secures the Tension pulley unit to the SIDE FRAME, LEFT, and remove the Tension pulley unit and the LF BELT. See LF BELT (p. 162)
6. Remove the E-ring that secures the left end of the DV ROLLER R ASY, and remove the Belt guide and the DV gear.
7. Remove the E-ring that secures the Tension pulley to the shaft on the SIDE FRAME, LEFT, and remove the Tension pulley.

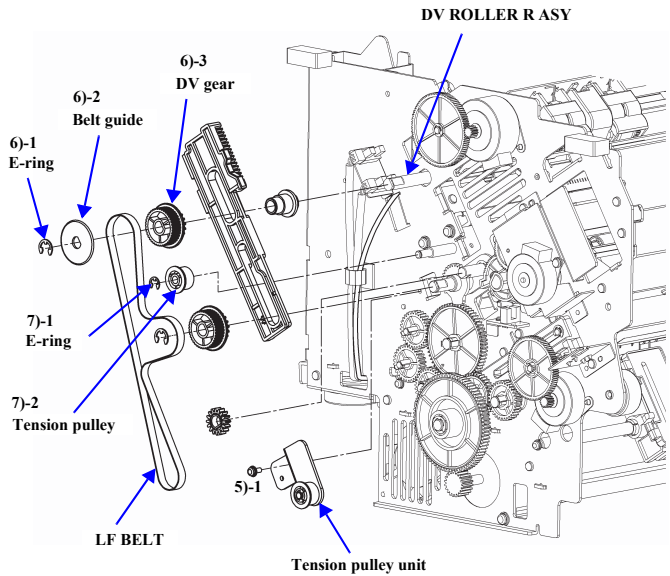

Figure 4-60. DV ROLLER R ASY Removal (1)

8. Remove the C.B.S. 3 × 6 screw that secures the OC SENSOR BR UNIT, and remove the OC SENSOR BR UNIT. See OC SENSOR BR UNIT (p. 204).

CAUTION

When removing the OC SENSOR BR UNIT, be careful not to interfere with the tabs on the bottom of the OC slide cam L that pass through the photo sensor.

9. Remove the E-ring that secures the left end of the DV ROLLER F ASY, and remove the DV gear.
10. Remove the Nip gear from the Nip roller shaft.
11. Remove the OC slide cam L, and remove the Bearing RL from the DV ROLLER R ASY.

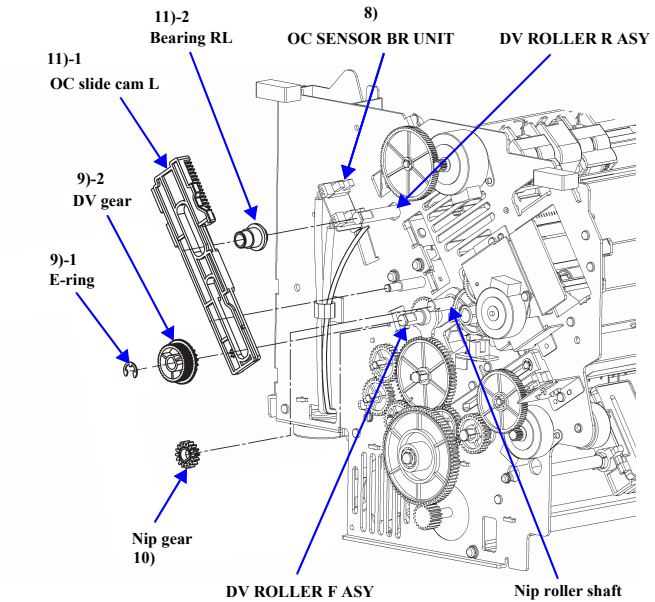

Figure 4-61. DV ROLLER R ASY Removal (2)

12. Remove the E-ring that secures the left end of the OC shaft, and remove the OC gear 1, spring washer, washer, and the OC Bearing L.

13. Remove the E-ring that secures the left end of the Nip roller shaft R, and remove the Collar.

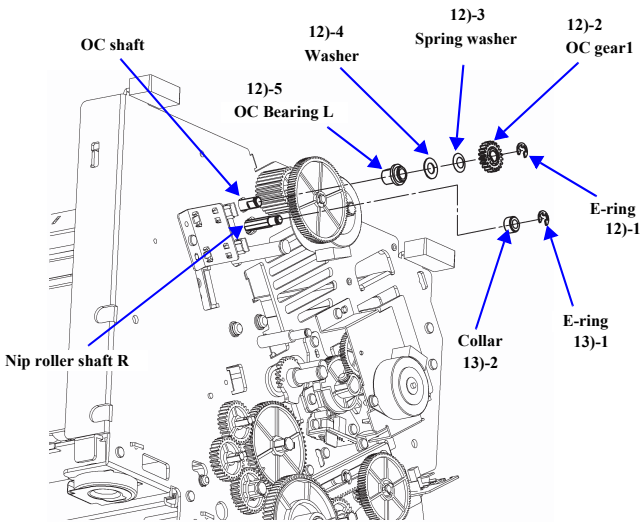

Figure 4-62. DV ROLLER R ASY Removal (3)

14. Remove the two C.B.S. 3 × 6 screws that secure the Nip bracket unit to the SIDE FRAME, RIGHT, and remove the Nip bracket unit.
15. Release the tab that secures the DV gear R to the right end of the DV ROLLER R ASY, and remove the DV gear R, spring washer, and washer.
16. Remove the E-ring that secures the right end of the DV ROLLER F ASY, and remove the washer and spring washer.
17. Remove the OC slide cam R, and remove the Bearing RR from the DV ROLLER R ASY.

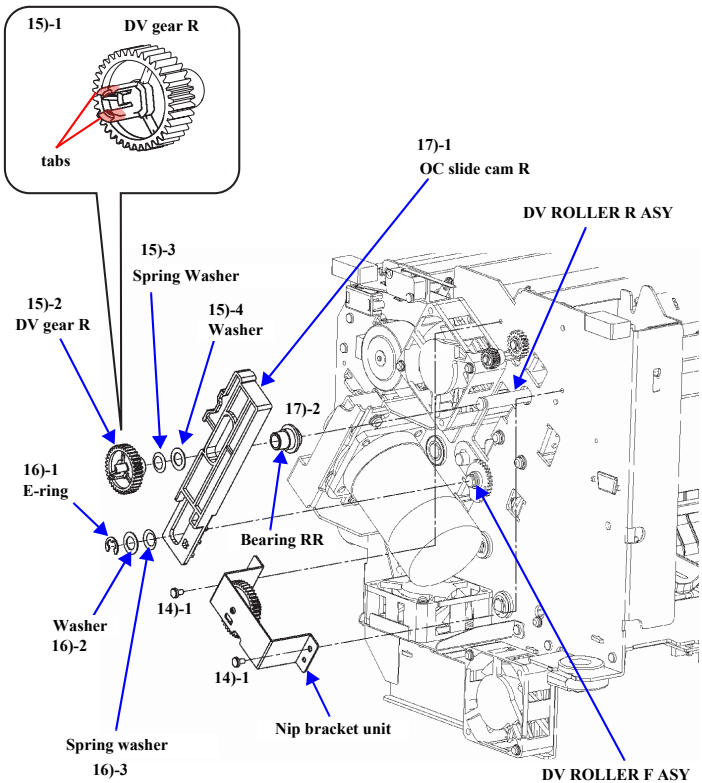

Figure 4-63. DV ROLLER R ASY Removal (4)

18. Remove the E-ring that secures the right end of the Nip roller shaft R, and remove the Nip gear R2.
19. Remove the E-ring that secures the Collar to the Nip roller shaft R, and remove the Collar.
20. Remove the E-ring that secures the right end of the OC shaft, and remove the OC gear 1 and OC Bearing R.

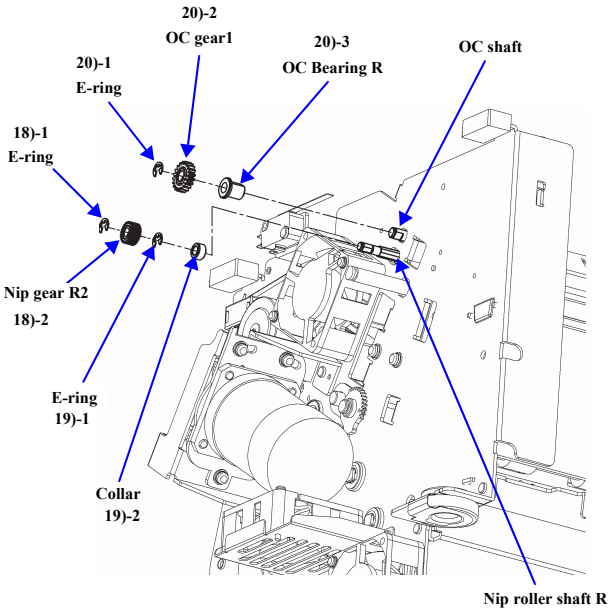

Figure 4-64. DV ROLLER R ASY Removal (5)

21. From inside the frame, remove the E-ring that secures the left end of the OC shaft to the inside of the Upper guide R unit.
22. Remove the right and left E-rings that secure the right and left ends of the Nip roller shaft to the inside of the Upper guide R unit.
23. Release the tabs (2 places each) that secure the right and left Upper Guide Springs, and remove both Upper guide springs.

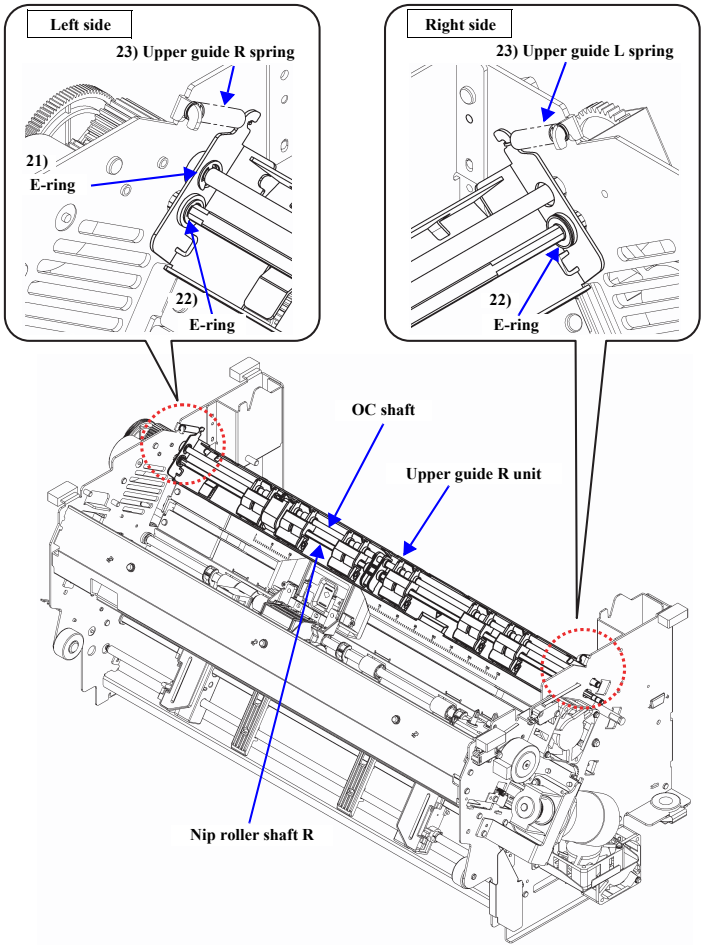

Figure 4-65. DV ROLLER R ASY Removal (6)

24. Slide the OC shaft and Nip roller shaft R to the right until they clear the shaft holes on the SIDE FRAME, LEFT.

25. Lift up the left end of the Upper guide R unit to release it from the PR MECHA ASY, then slide the Upper guide R unit to the left to remove the right end of the shaft from the SIDE FRAME, RIGHT. Then remove the Upper guide R unit.

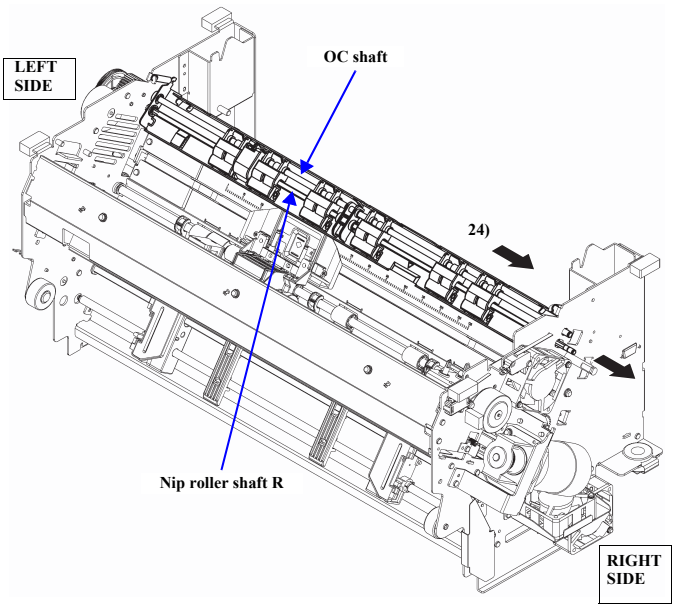

Figure 4-66. DV ROLLER R ASY Removal (7)

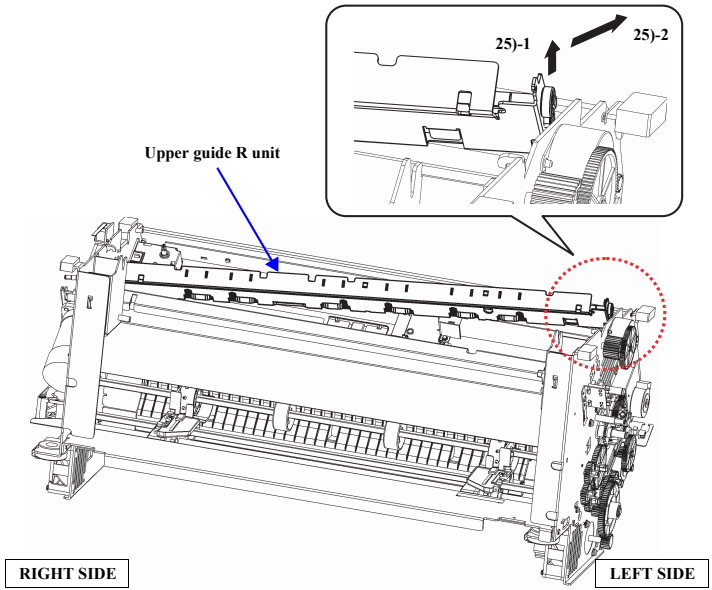

Figure 4-67. DV ROLLER R ASY Removal (8)

26. Remove the four C.B.S. 3 × 6 screws that secure the Lower guide R, and remove it in the direction of the arrow in Figure 4-69.

27. Slide the DV ROLLER R ASY to the left to remove the right end of the shaft from the right side frame, then remove the left end of the DV ROLLER shaft from the left side frame.

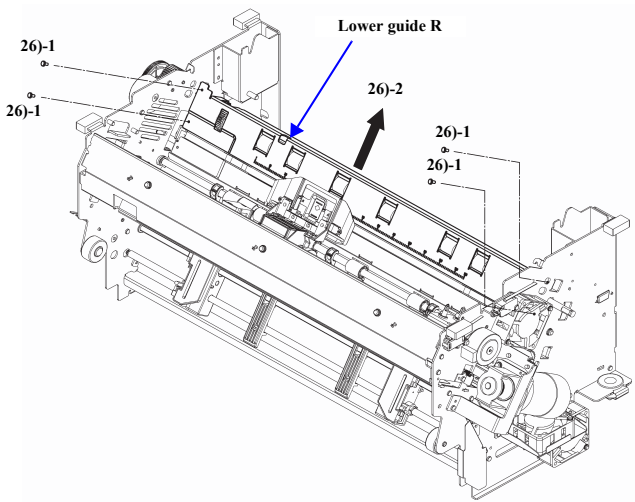

Figure 4-68. DV ROLLER R ASY Removal (9)

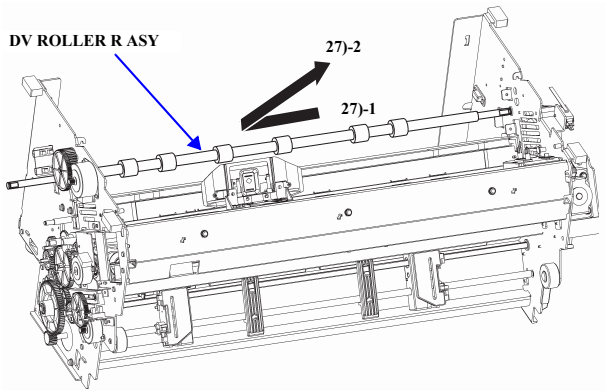

Figure 4-69. DV ROLLER R ASY Removal (10)

Reassembly

The OC slide cam L and OC cam, and the OC slide cam R and OC cam have phases that must be matched. Refer to the figure below and install these parts so that the center of the phase mark on the OC cam is centered in the window in the left and right OC slide cams.

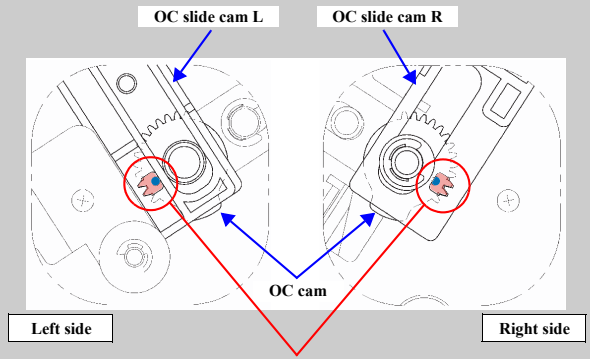

Figure 4-70. Reassembly the OC slide cam

ADJUSTMENT REQUIRED

Be sure to perform the following maintenance and adjustments after removing the DV ROLLER F ASY.

1. Lubricate the gears and bearing. See Chapter 6, Shafts, bearings and OC cam (p. 260), and Gears and slide cams (p. 261).
2. LF drive belt tension adjustment (p. 222)

4.2.4.16 CARRIER CABLE UNIT

WARNING

Do not touch the motors or the PRINT HEAD immediately after using the printer, or you may burn your hand. Allow them to cool enough to work with them.

CAUTION

A ferrite core is attached to the CARRIER CABLE UNIT to prevent electromagnetic interference. Handle the CARRIER CABLE UNIT with care when removing or installing it.

1. Remove the PR MECHA ASY (p. 149).
2. Release the cables from the two cable clamps on the SIDE FRAME, RIGHT.
3. Remove the C.B.S. 3 × 6 screw that secures the CR cable cover, and remove the CR cable cover.
4. Release the six tabs that secure the Cable cover to the frame, and remove the Cable cover.
5. Slide the Cable holder to the left, as shown by the arrow in Figure 4-71, and remove it.

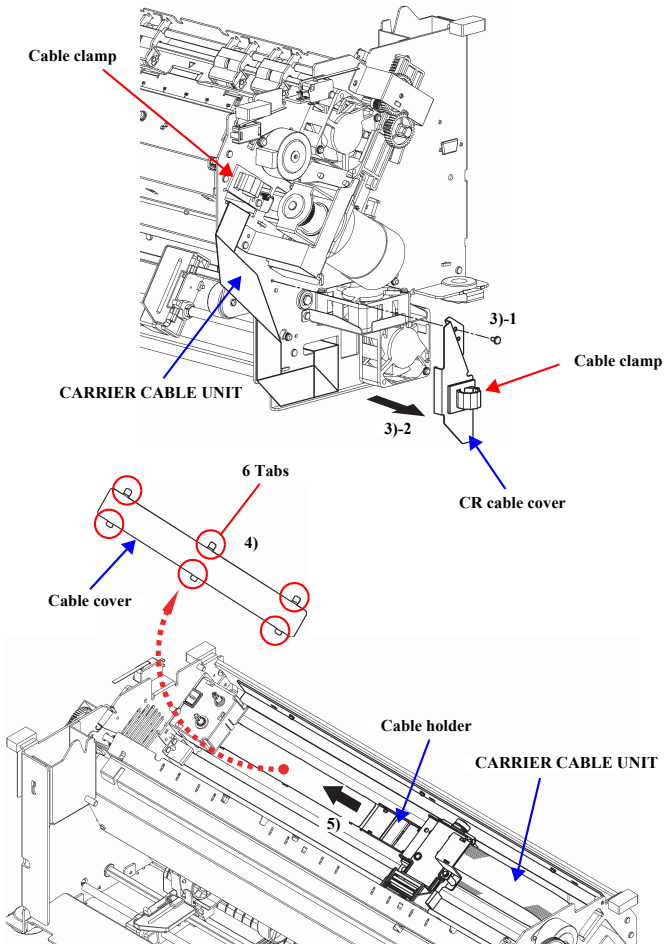

Figure 4-71. CARRIER CABLE UNIT Removal (1)

6. Slowly feed the CARRIER CABLE UNIT FFC inside the printer mechanism toward the carrier as follows: First, pull the FFC from the bottom of the mechanism outside through the hole near the bottom of the SIDE FRAME, RIGHT. Then, feed the cable in toward the carrier through the hole in the frame beneath the upper cable clamp. See Figure 4-72.

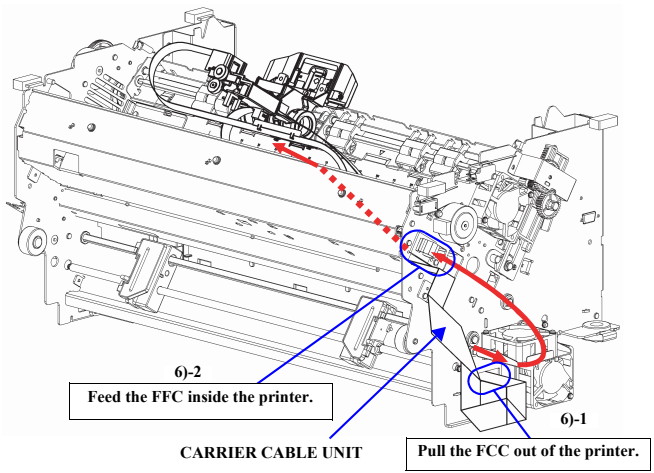

Figure 4-72. CARRIER CABLE UNIT Removal (2)

7. Remove the two C.P. (S-P1) 2.5 × 8 and one C.F. 2.5 × 4 screws that secure the Carrier holder to the CARRIER UNIT using a Phillips No.1 screwdriver.

8. Lift the front side of the carrier holder. Disconnect the CARRIER CABLE UNIT from the connector on the Carrier PCB, and then remove the Carrier holder. Refer to section 4.2.4.3 CARD GUIDE ASY, p. 153.

9. Release the two tabs that secure the cable cover of the CARRIER CABLE UNIT to the Carrier holder, and remove the CARRIER CABLE UNIT.

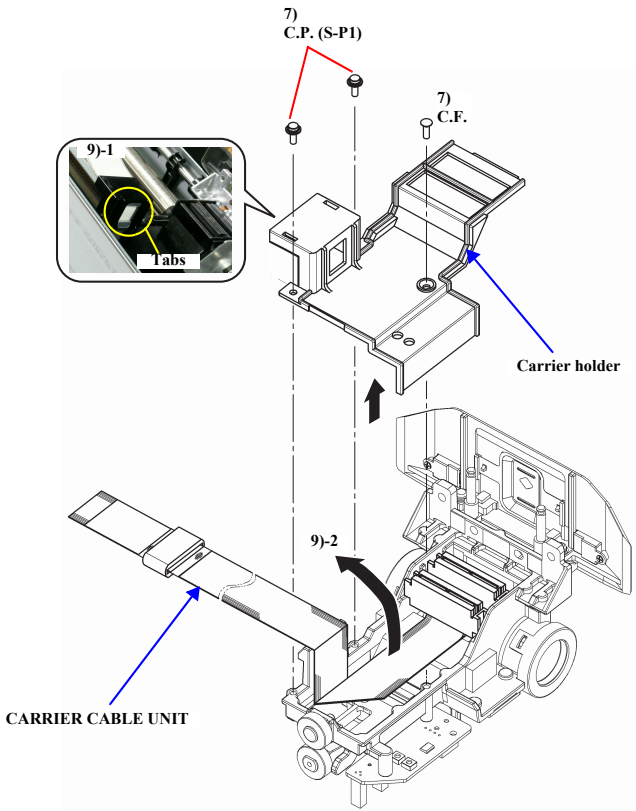

Figure 4-73. CARRIER CABLE UNIT Removal (3)

4.2.4.17 CARRIER UNIT

Stay shaft

WARNING

Do not touch the motors or the PRINT HEAD immediately after using the printer, or you may burn your hand. Allow them to cool enough to work with them.

CAUTION

A ferrite core is attached to the CARRIER CABLE UNIT to prevent electromagnetic interference. Handle the CARRIER CABLE UNIT with care when removing or installing it.

1. Remove the PR MECHA ASY (p. 149)
2. Remove the PRINT HEAD (p. 152)
3. Remove the CES SCALE (p. 159)
4. Remove the SP MOTOR ASY (p. 156)
5. Remove the APTC UNIT (p. 169)
6. Remove the four C.B.S. 3 × 6 screws that secure the Stay shaft to the SIDE FRAME, LEFT together with the SS bearing.
7. Rotate the SS gear to the position where the SS gear flag does not interfere with the APTC HP sensor.
8. Hold the SS bearing on the left end of the Stay shaft, and slide the Stay shaft to the left until its right end is released from the SIDE FRAME, RIGHT.

CAUTION

When releasing the end of the Stay shaft from the SIDE FRAME, RIGHT, pull the Stay shaft straight out without rotating it. Otherwise, the SS bearing may hit and damage the APTC HP sensor.

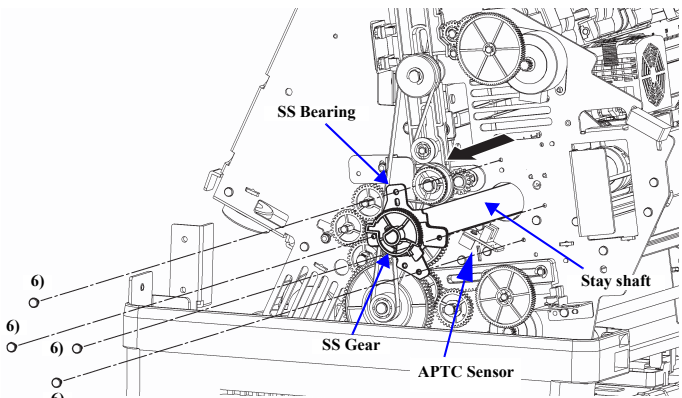

Figure 4-74. Stay shaft Removal (1)

Caution

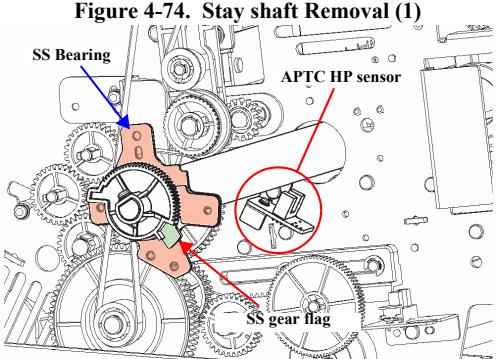

Figure 4-75. Stay shaft Removal (2)

9. Hold both the SS bearing on the left end of the Stay shaft and the bearing on the right end, and slowly pull out the Stay shaft to the left rotating it until the right end of the Stay shaft nearly reaches the CARRIER UNIT.

CAUTION

When pulling and rotating the Stay shaft, be careful not to damage the Stay shaft with the sharp edge of the hole (the through-hole for the Stay shaft) in the SIDE FRAME, LEFT.

10. Remove the bearing and washer on the right end of the Stay shaft, and then slowly pull the Stay shaft out from both the CARRIER UNIT and the SIDE FRAME, LEFT.

CAUTION

- The Stay shaft should be touched as little as possible.
- When inserting the Stay shaft, be careful not to damage the surface of the Stay shaft with the hole of the SIDE FRAME, LEFT.

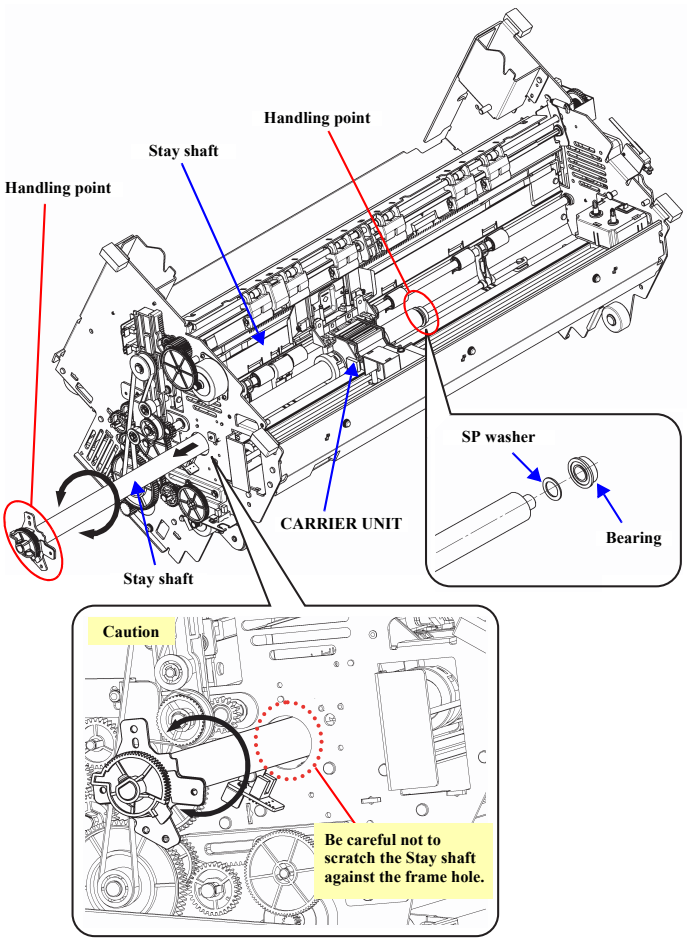

Figure 4-76. Stay shaft Removal (3)

CARRIER UNIT

11. Release all the cables from the two cable clamps on the SIDE FRAME, LEFT.
12. Remove the C.B.S. 3 × 6 screw that secures the CR cable cover, and remove the CR cable cover.
13. Release the six tabs that secure the Cable cover to the frame, and remove the Cable cover.
14. Slide the Cable holder in the direction of the arrow to remove it.

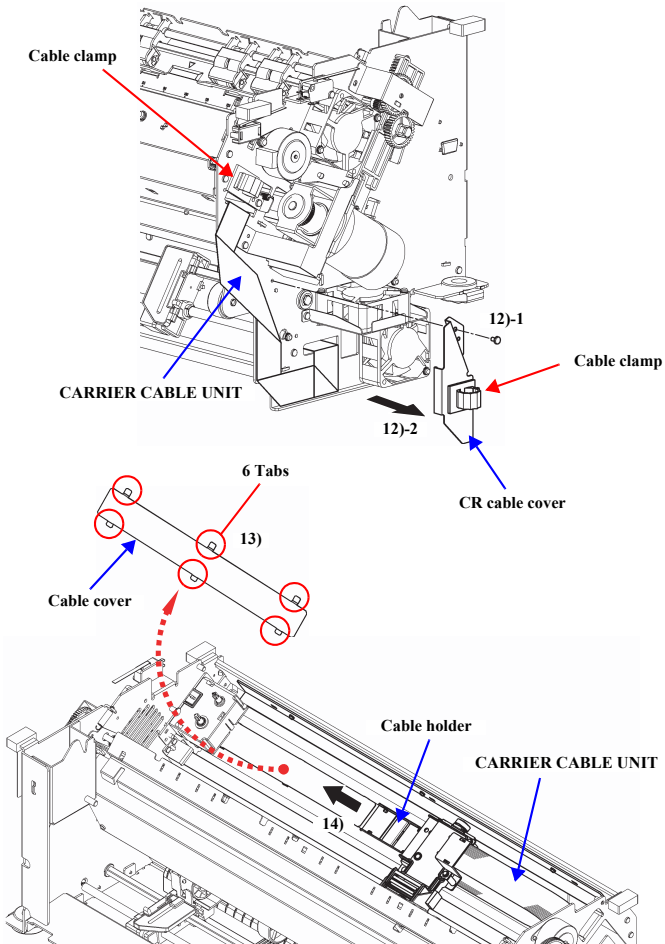

Figure 4-77. CARRIER UNIT Removal (1)

15. Slowly feed the CARRIER CABLE UNIT inward toward the Carrier Unit through the holes of the SIDE FRAME, RIGHT. (2 places)
16. Remove the CARRIER UNIT together with the CARRIER CABLE UNIT and the SP BELT.

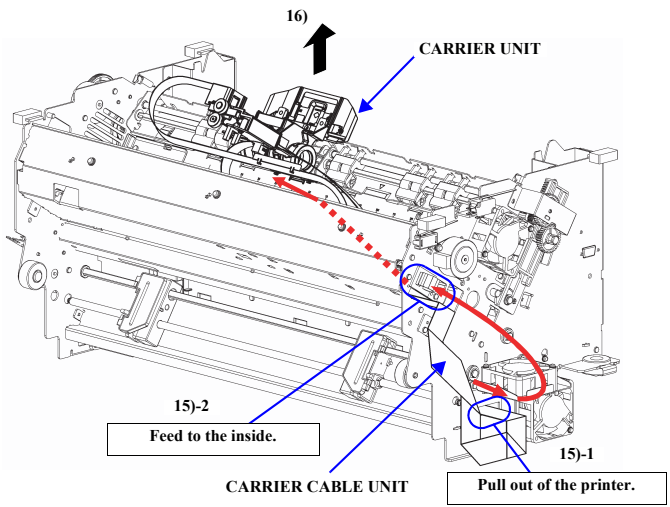

Figure 4-78. CARRIER UNIT Removal (2)

ADJUSTMENT REQUIRED

After removing or replacing the CARRIER UNIT, be sure to perform the following maintenance and adjustments.

1. Lubricate the oil felt on the Carrier Unit, Figure 6-10 on page 267
2. CR drive belt (SP BELT) tension adjustment (p. 220).
3. Card guide mount position adjustment (p. 227)
4. LF Drive Belt Tension Adjustment (p. 222)
5. TOF sensor sensitivity adjustment (p. 235)
6. APTC thickness detection adjustment (p. 238)
7. APTC detection position adjustment (p. 241)
8. Top margin adjustment (p. 245)
9. Left margin adjustment (p. 247)
10. Bi-D adjustment (p. 250)

4.2.4.18 Sensors

PJS HOLDER ASY

1. Remove the PR MECHA ASY (p. 149)
2. Remove the Stay shaft. Refer to section 4.2.4.17 CARRIER UNIT, p. 191.
3. Release the PJ sensor cable from the two cable clamps on the bottom rear of the printer.
4. Disconnect the PJ sensor cable from the SENSOR BOARD UNIT (CNPJS: 3 pins), and pull the PJ sensor cable to the outside through the hole in the SIDE FRAME, LEFT.
5. Feed the PJ sensor cable to the inside of the printer mechanism through the hole in the SIDE FRAME, LEFT.
6. Pull the PJ sensor cable out through the cutout on the left side of the PR MECHA ASY, and release the PJ sensor cable from under the retaining tab.

Reassembly

Route the PJ sensor cable behind the two Tractor shafts as shown in Figure 4-80

7. Remove the three C.B.S. 3 × 8 screws that secure the Nip shaft F.

Reassembly

Screw the Nip shaft F securely with its flat-surfaces on both ends facing downward.

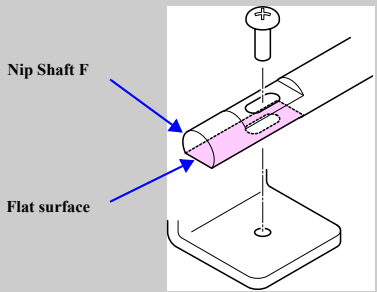

Figure 4-79. Nip Shaft F Installation Orientation

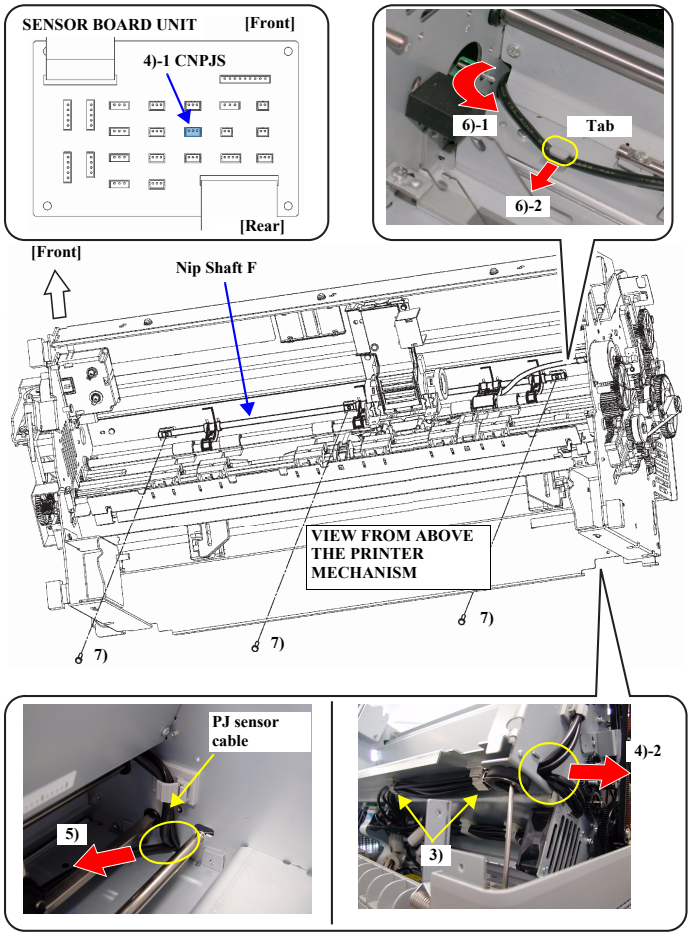

Figure 4-80. PJS HOLDER ASY Removal (1)

8. Remove the PJS HOLDER ASY from the PJS ROLLER.
9. Move the CARRIER UNIT to the right side of the PR MECHA ASY, and remove Nip shaft F together with the three Nip spring holders F, 3 Nip springs, PJS HOLDER ASY, and the PJS spring.

Reassembly

- Match the straight legs of the Nip Springs F and the PJS spring with the grooves of the 3 Nip spring holders F and the PJS HOLDER ASY (2 each).
- Face the L-shaped legs of the Nip Springs F and the PJS spring to the front side of the PR MECHA ASY, and match the ribs (2 places each) and notches of the Nip spring holders F and the PJS holder spring.
- Route the PJS sensor cable as shown in Figure 4-81

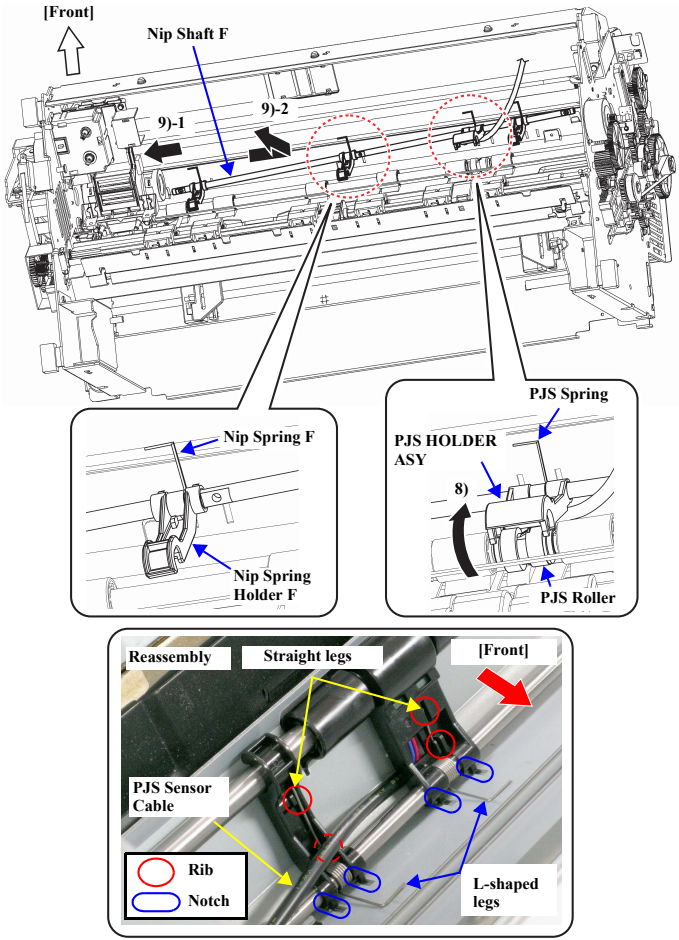

Figure 4-81. PJS HOLDER ASY Removal (2)

10. Slide the right-most Nip spring holder F and Nip spring F off of Nip shaft F.
11. Slide the PJS HOLDER ASY and the PJS spring off of Nip shaft F, and remove the PJS HOLDER ASY.

CAUTION

The Nip spring F and the PJS spring look similar, but vary in shape - specifically, the number of coil turns. Do not mistake Nip spring F for the PJS spring when you install them.

ADJUSTMENT REQUIRED

Be sure to perform the following adjustments after removing the PJS HOLDER ASY.

1. APTC UNIT mount position adjustment (p. 224)
2. LF drive belt tension adjustment (p. 222)

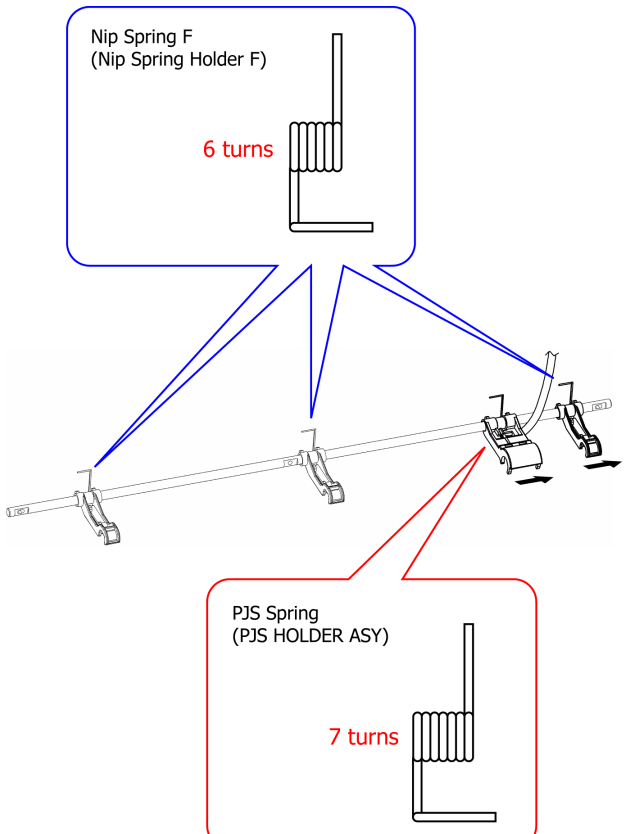

Figure 4-82. PJS HOLDER ASY Removal (3)

PJS ROLLER

1. Remove the PJS HOLDER ASY (p. 195)
2. Perform Steps 4 through 12 in DV ROLLER F ASY (p. 175), and remove the following parts from the SIDE FRAME, LEFT.
   - Tension pulley unit
   - LF BELT
   - Belt guide
   - DV gear
   - Tension pulley
   - Nip gear
   - OC slide cam
   - OC cam
   - Bearing FL

   See Figure 4-83.

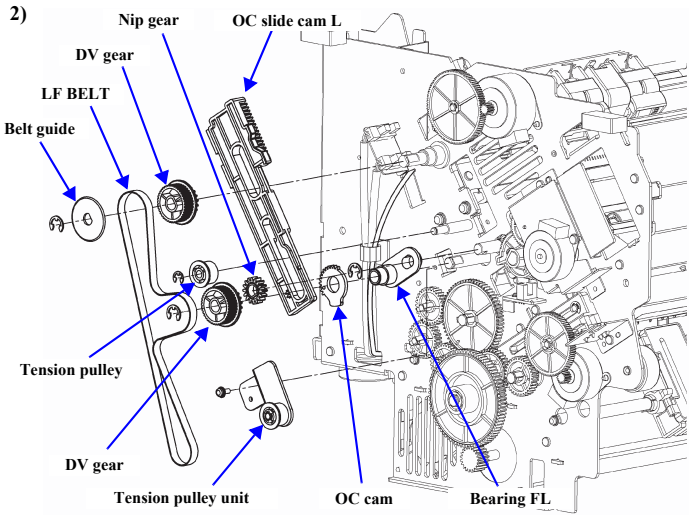

Figure 4-83. PJS ROLLER Removal (1)

3. Remove the E-rings on both ends of the Nip roller ASY.
4. Slide the Nip roller ASY to the left to clear the right-end of the shaft from the shaft hole, and then pull the left-end of the shaft from the shaft hole to remove the Nip roller ASY.
5. Release the two tabs that secure Nip roller F, and slide Nip roller F off of Nip roller shaft F.
6. Slide the PJS ROLLER off of Nip roller shaft F.

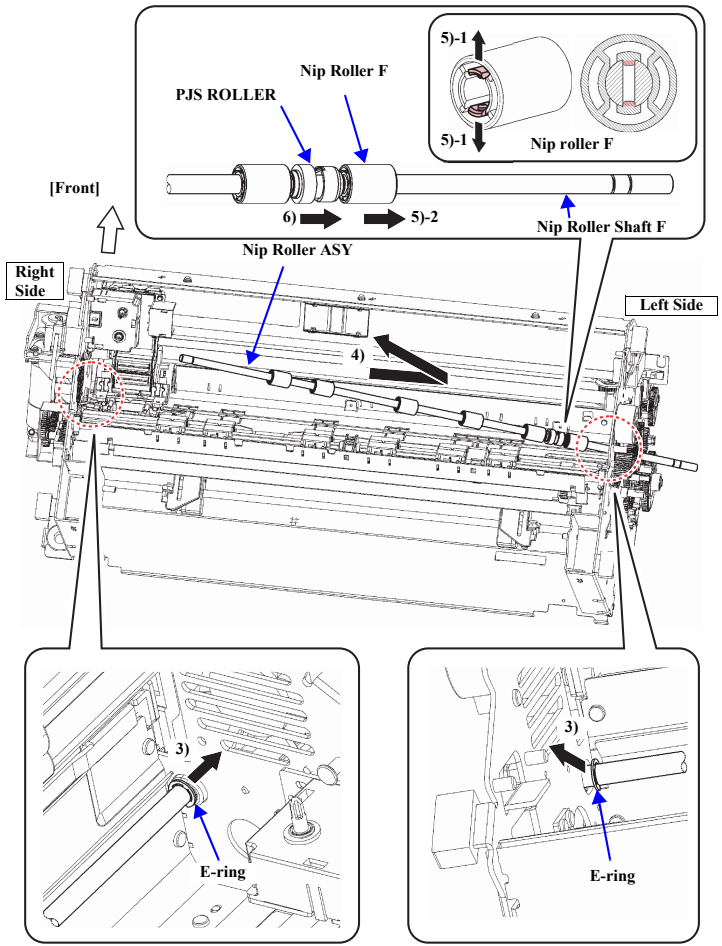

Figure 4-84. PJS ROLLER Removal (2)

TPE HOLDER ASY

WARNING

- Disconnect the power cable and wait at least 5 minutes for capacitors to drain before disassembling the POWER UNIT. If you touch the POWER UNIT with the power supplied, you may receive an electric shock.
- Do not touch the motors immediately after using the printer, or you may burn your hand. Allow the motors to cool enough to work with them

1. Remove the UPPER UNIT (p. 135)
2. Tilt up the rear of the PR MECHA ASY and support it using the tilt bar. Refer to section 4.2.4.1 PR MECHA ASY, p. 149.
3. Release the TPE sensor cable from the two cable clamps on the bottom rear of the printer.
4. Disconnect the TPE sensor cable from the SENSOR BOARD UNIT (CNTPES: 3 pins), and pull the TPE sensor cable outside the printer mechanism through the lower hole in the SIDE FRAME, LEFT.
5. Release the TPE sensor cable from the cable clamp on the SIDE FRAME, LEFT, and feed the TPE sensor cable inside the printer mechanism through the upper hole in the SIDE FRAME, LEFT.

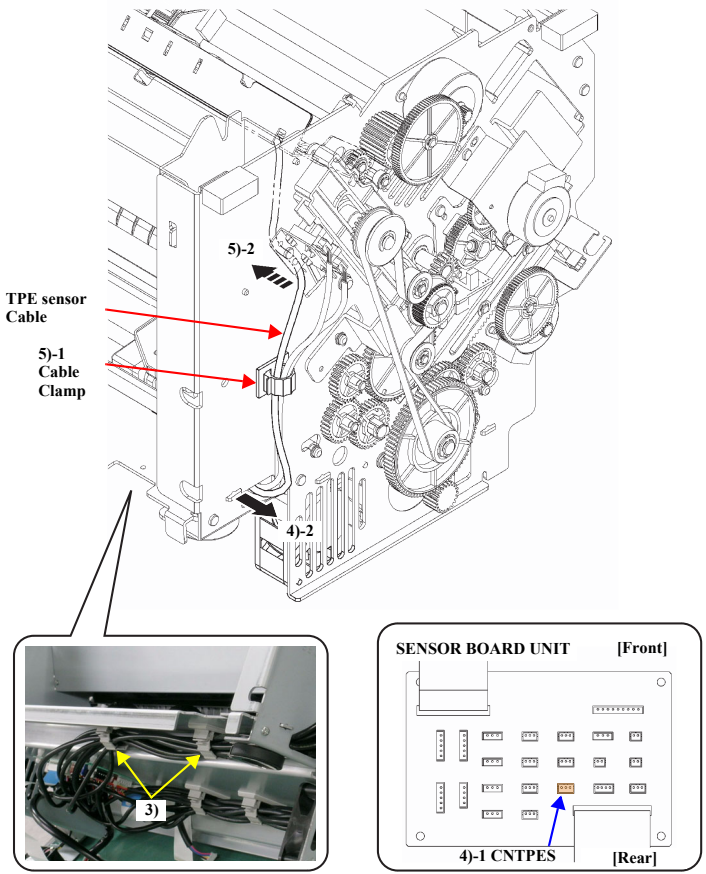

Figure 4-85. TPE HOLDER ASY Removal (1)

6. Release the TPE sensor cable from the retaining tab on the Upper guide R unit.
7. Release the catch on the TPE HOLDER ASY, and tilt the TPE HOLDER ASY toward you. Pull the TPE sensor cable out from behind the Paper eject roller, and remove the TPE HOLDER ASY.

Reassembly

Align the TPE HOLDER ASY with the cutout on the Upper guide R unit as shown in the lower-right photo in Figure 4-86.

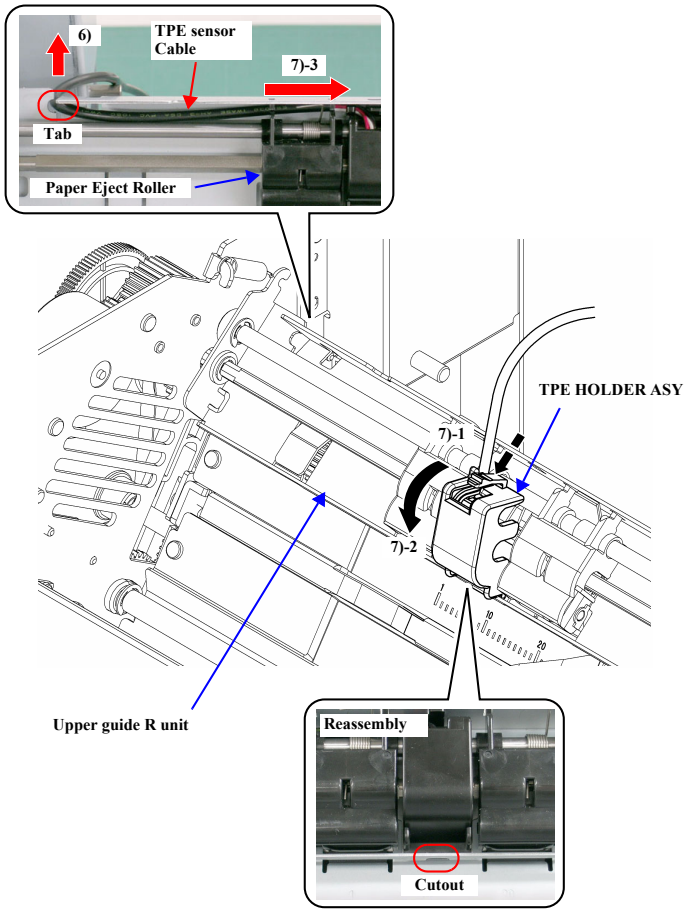

Figure 4-86. TPE HOLDER ASY Removal (2)

APTC HP UNIT

WARNING

- Disconnect the power cable and wait at least 5 minutes for capacitors to drain before disassembling the POWER UNIT, or you may receive an electric shock.
- Do not touch the motors immediately after using it, or you may burn your hand. Allow the motors to cool enough to work with them.

1. Remove the UPPER UNIT (p. 135)
2. Tilt up the rear of the PR MECHA ASY and support it using the tilt bar. Refer to section 4.2.4.1 PR MECHA ASY, p. 149.
3. Release the APTC HP sensor cable from the three cable clamps on the bottom rear of the printer.
4. Disconnect the APTC HP sensor cable from the SENSOR BOARD UNIT (CNAPTCHPS: 3 pins), and pull the APTC HP sensor cable outside the printer mechanism through the hole in the SIDE FRAME, LEFT.
5. Release the APTC HP sensor cable from the two side-frame cable clamps and the notch of the HCPP SENSOR UNIT mounting bracket.

CAUTION

When routing the APTC HP sensor cable, be careful not to pull too hard on it. Make sure it does not interfere with the SS gear.

6. Remove the C.B.S. 3 × 6 screw that secures the APTC HP UNIT, and remove it.

Reassembly

When you install the APTC HP UNIT, the bracket alignment notch must fit against the positioning shaft on the side frame, as shown in Figure 4-87.

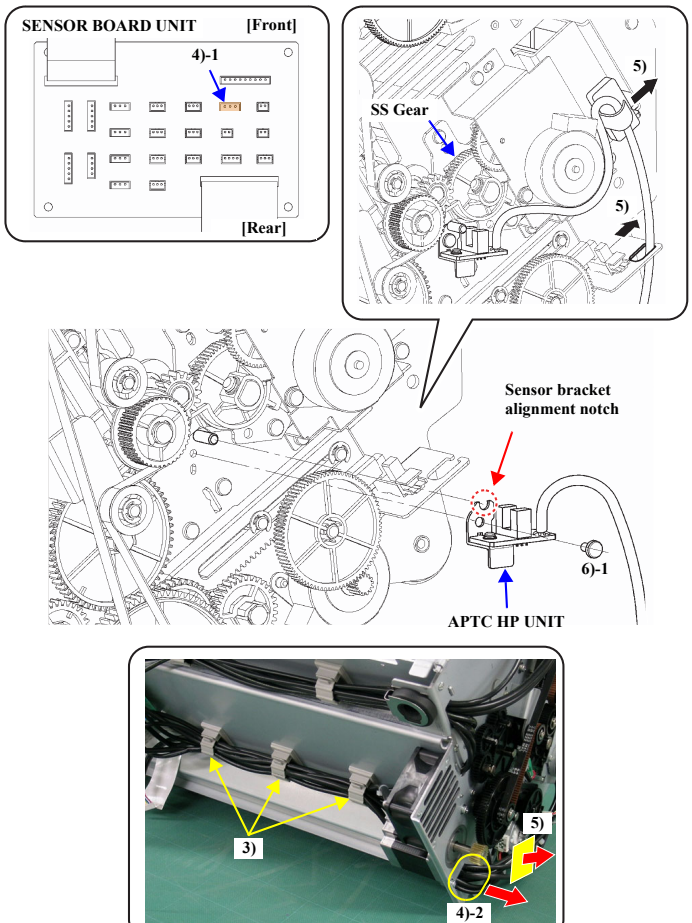

Figure 4-87. APTC HP UNIT Removal

OC SENSOR BR UNIT

WARNING

- Disconnect the power cable and wait at least 5 minutes for capacitors to drain before disassembling the POWER UNIT. If you touch the POWER UNIT with the power supplied, you may receive an electric shock.
- Do not touch the motors immediately after using the printer, or you may burn your hand. Allow the motors to cool enough to work with them.

1. Remove the UPPER UNIT (p. 135)
2. Tilt up the rear of the PR MECHA ASY and support it using the tilt bar. Refer to section 4.2.4.1 PR MECHA ASY, p. 149.
3. Release both the OC sensor 1 and OC sensor 2 cables from the two cable clamps on the bottom rear of the printer.
4. Disconnect both the OC sensor 1 (CNOCS1: 3 Pin, Black) and OC sensor 2 (CNOCS2: 3 Pin, Blue) cables from the connectors on the SENSOR BOARD UNIT, and pull both cables outside the printer mechanism through the lower hole in the SIDE FRAME, LEFT.
5. Release both cables from the cable clamp on the SIDE FRAME, LEFT.
6. Remove the C.B.S. 3 × 6 screw that secures the OC SENSOR BR UNIT, and remove it.

Reassembly

- Be sure to connect the OC sensor 1 (Black connector) and OC sensor 2 (Blue connector) cables to their correct connectors on the SENSOR BOARD UNIT.
- When installing the OC SENSOR BR UNIT, match the positioning holes of the OC SENSOR BR UNIT with the positioning dowels on the side frame.

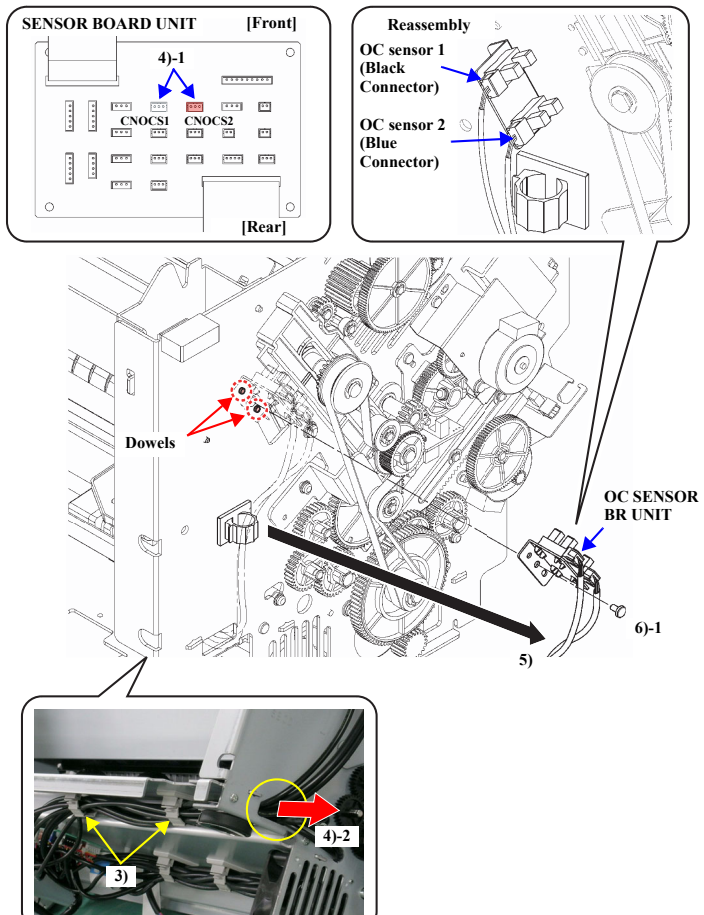

Figure 4-88. OC SENSOR BR UNIT Removal

HCPP SENSOR UNIT

WARNING

- Disconnect the power cable and wait at least 5 minutes for capacitors to drain before disassembling the POWER UNIT. If you touch the POWER UNIT with the power supplied, you may receive an electric shock.
- Do not touch the motors immediately after using the printer, or you may burn your hand. Allow the motors to cool enough to work with them.

1. Remove the UPPER UNIT (p. 135)
2. Tilt up the rear of the PR MECHA ASY and support it using the tilt bar. Refer to section 4.2.4.1 PR MECHA ASY, p. 149.
3. Release the HCPP sensor cable from the three cable clamps on the bottom rear of the printer.
4. Disconnect the HCPP sensor cable from the SENSOR BOARD UNIT (CNPPSS: 3 pins), and pull the HCPP sensor cable outside the printer mechanism through the hole in the SIDE FRAME, LEFT. Release the HCPP sensor cable from the cable clamp on the side frame.
5. Remove the C.B.S. 3 × 6 screw that secures the HCPP SENSOR UNIT, release all the cables from the tab of the HCPP SENSOR UNIT, and remove the HCPP SENSOR UNIT.

Reassembly

- To prevent the HCPP sensor cable insulation from being damaged by the metal edge of the cable guide notch on the HCPP SENSOR UNIT, pull the protective tube up close to the HCPP sensor.
- When installing the HCPP SENSOR UNIT, match the positioning holes of the HCPP SENSOR UNIT to the pins on the side frame.

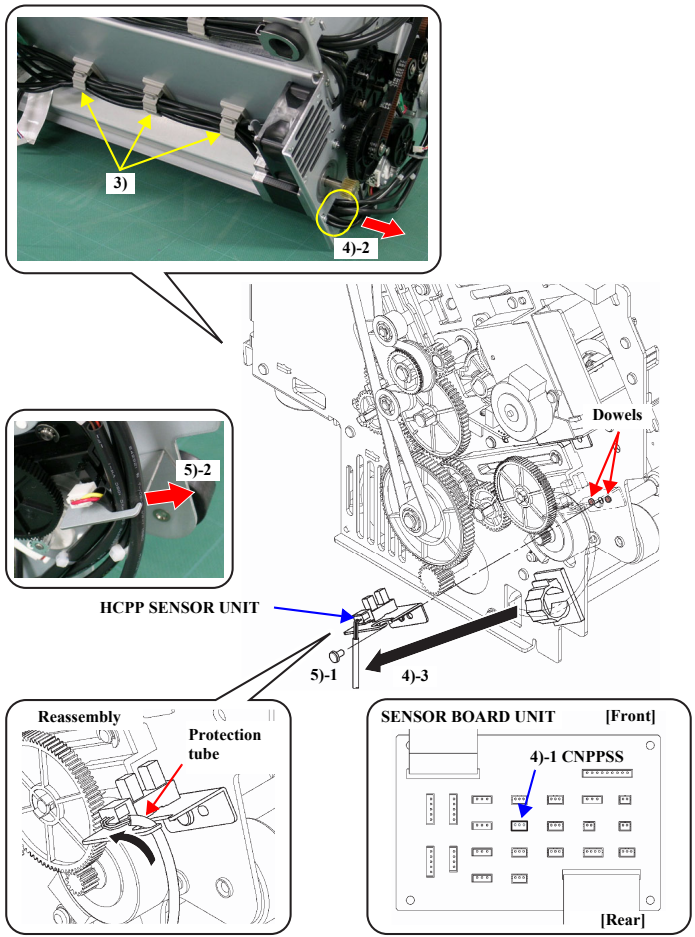

Figure 4-89. HCPP SENSOR UNIT Removal

PTRM SWITCH ASY

WARNING

- Disconnect the power cable and wait at least 5 minutes for capacitors to drain, or you may receive an electric shock.
- Allow the motors to cool enough to work with them.

1. Remove the UPPER UNIT (p. 135)
2. Tilt up the rear of the PR MECHA ASY and support it using the tilt bar. Refer to section 4.2.4.1 PR MECHA ASY, p. 149.
3. Remove the two C.B.S. 3 × 6 screws that secure the Side frame UL (upper left) to the SIDE FRAME, LEFT, and remove the Side frame UL. Remove the Side frame UR (upper right) in the same way.

Reassembly

When installing the Side frame UL and UR, match the positioning holes and tab of the Side frame UL / UR with the pins and slot in the SIDE FRAME.

CHECK POINT

When performing the following procedures, release the TPE sensor cable at the same time. See TPE HOLDER ASY (p. 201))

4. Release the PTRM switch cable from the two cable clamps on the bottom rear of the printer.
5. Disconnect the PTRM switch cable from the SENSOR BOARD UNIT (CNPTRM: 2 pins), and pull the PTRM switch cable out through the lower hole in the bottom of the SIDE FRAME, LEFT.
6. Release the PTRM switch cable from the cable clamp on the inside of the SIDE FRAME, LEFT, and feed the PTRM switch cable inside the printer mechanism through the upper hole in the SIDE FRAME, LEFT.

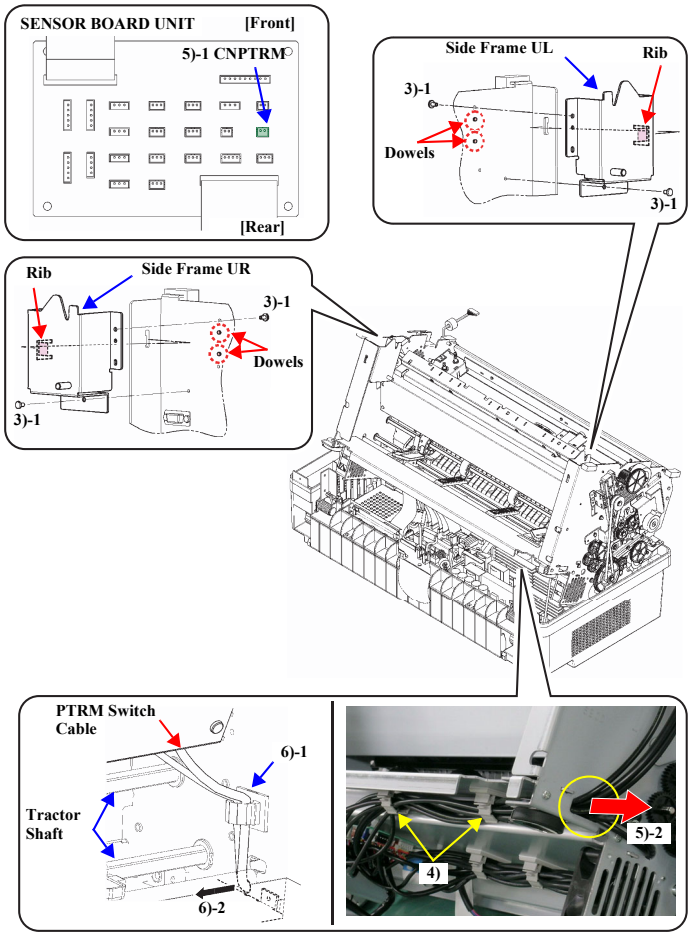

Figure 4-90. PTRM SWITCH ASY Removal (1)

CAUTION

You need to support the Back Stay during the next step to prevent it from dropping off.

7. Remove the four C.B.S. 3 × 6 screws that secure the Back stay ASY, and remove the Back stay ASY.

Reassembly

When installing the Back stay ASY, match the positioning holes of the Back stay ASY with the guide pins.

8. Release the two tabs that secure the PTRM SWITCH ASY, and remove it.

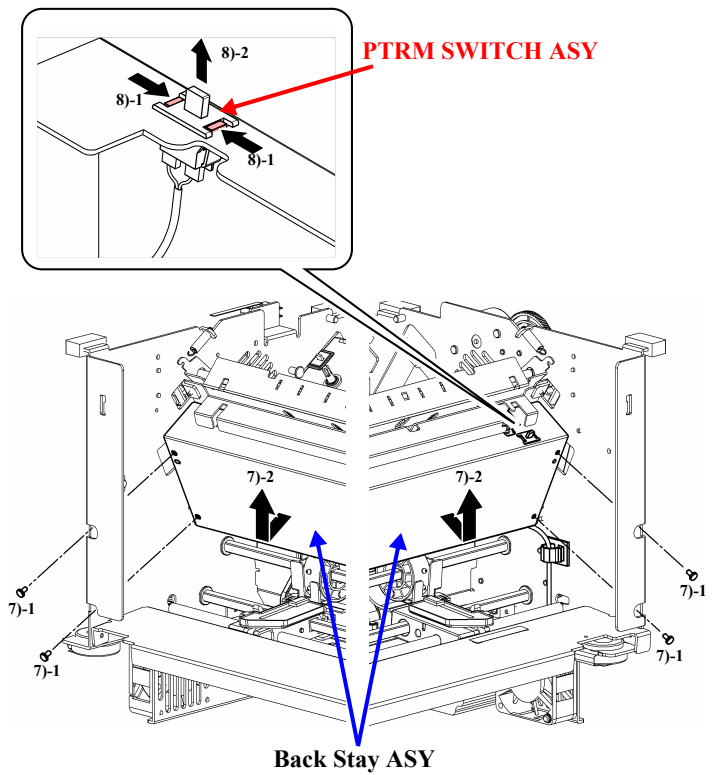

Figure 4-91. PTRM SWITCH ASY Removal (2)

4.2.4.19 FAN MOTORS (FAN1 MOTOR to FAN4 MOTOR)

1. Remove the PR MECHA ASY (p. 149).
2. Remove the cables for each FAN MOTOR from the SENSOR BOARD UNIT on the bottom rear of the PR MECHA ASY.
3. Release the FAN1 MOTOR cable from the three clamps on the bottom rear of the PR MECHA ASY.
4. Remove the two C.P. (S-P1) 3 × 30 screws that secure the FAN1 MOTOR to the SIDE FRAME, LEFT, and remove the FAN1 MOTOR.
5. Release the FAN2 MOTOR, FAN3 MOTOR, and FAN4 MOTOR cables from the cable clamp on the PR MECHA ASY.
6. Release the FAN4 MOTOR cable from the two cable clamps on the SIDE FRAME, RIGHT.
7. Pull the FAN2 MOTOR, FAN3 MOTOR, and FAN4 MOTOR cables through the hole in the SIDE FRAME, RIGHT.
8. Remove the four C.P. (S-P1) 3 × 30 screws (two for each fan) that secure the FAN2 MOTOR and FAN4 MOTOR to the SIDE FRAME, RIGHT, and remove them.
9. Remove the two C.B.S. 3 × 6 screws that secure the FAN3 MOTOR and the fan bracket to the SIDE FRAME, RIGHT, and remove the FAN3 MOTOR together with the Fan bracket.
10. Remove the two C.P. (S-P1) 3 × 30 screws that secure the FAN3 MOTOR to the Fan bracket, and remove the FAN3 MOTOR.

Reassembly

After reinstalling the fans, verify the airflow direction is as shown by the arrows in Figure 4-92.

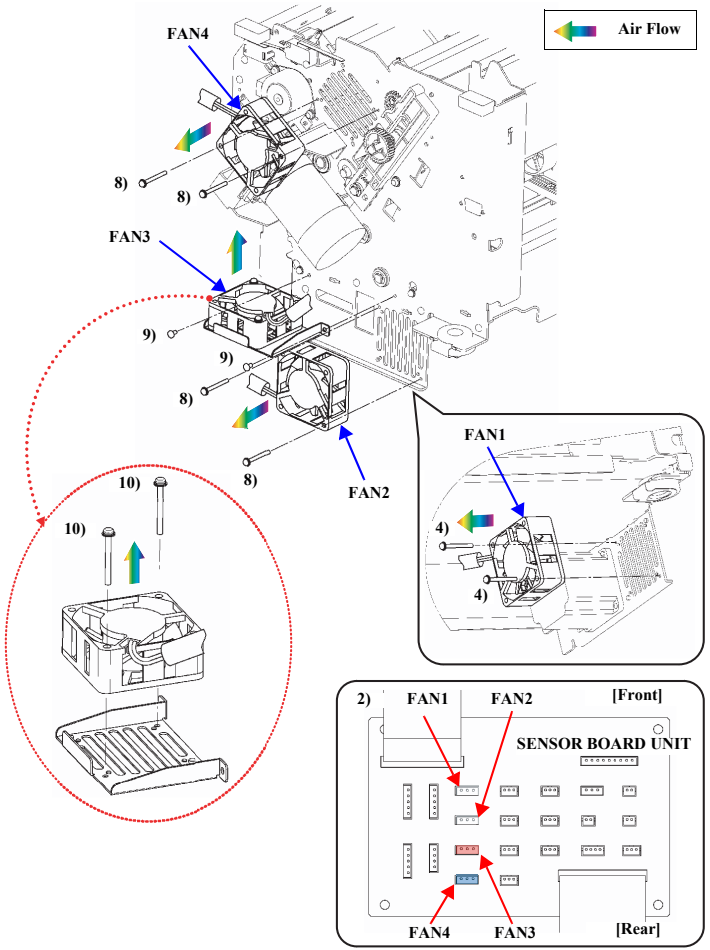

Figure 4-92. FAN MOTORS Removal

4.2.4.20 PULL TRACTOR UNIT L / PULL TRACTOR UNIT R

1. Position both Tractor locks to “free”.
2. Lift the two Center guides, and remove them from the Sub shaft and the Tractor shaft.
3. Remove the E-ring that secures the right end of the Tractor shaft.
4. Remove the two screws that secure the Sub shaft.
5. Move the Sub shaft to the recess holes on both sides of the frame, slide the whole unit to the right to release the left end, and then remove the whole unit.
6. Remove the bearing, spring washer, and washer that secure the PULL TRACTOR UNIT R, and pull the PULL TRACTOR UNIT R off of the Tractor shaft and the Sub shaft.

Reassembly

When installing the Tractor shaft, attach the spring washer in the direction as shown at the bottom left of Figure 4-93.

7. Remove the inner E-ring on the left side of the Sub shaft, and slide the PULL TRACTOR UNIT L all the way down and off the right side of the Tractor shaft and the Sub shaft.

Reassembly

The PULL TRACTOR UNIT L and PULL TRACTOR UNIT R have phases that must be matched. Align the phase marks on each of the pull tractor units before installing the Tractor shaft.

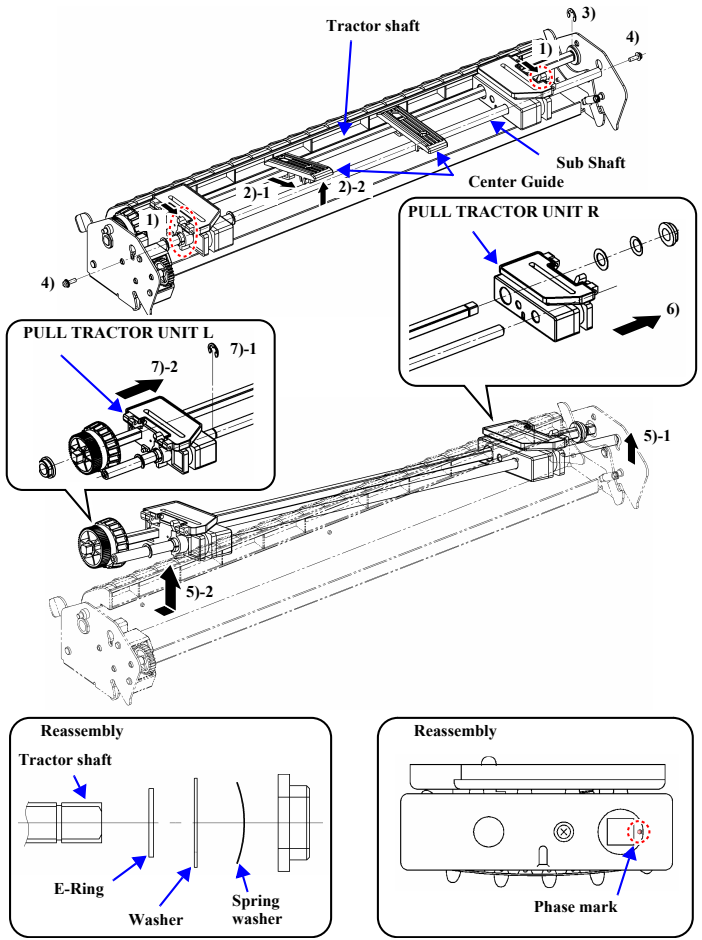

Figure 4-93. PULL TRACTOR UNIT L / PULL TRACTOR UNIT R Removal

CHAPTER

5

ADJUSTMENT

5.1 Adjustment overview

5.1.1 Required adjustments

This section describes the adjustments required after certain parts are removed or replaced. Table 5-1 below shows the parts removed or replaced, and the corresponding adjustments required.

- Numbers in cells show the adjustment order.
- A numbered cell with no shading indicates an adjustment that must be made only if the part is replaced with a new part.
- A yellow-shaded cell indicates an adjustment that is needed if the part is removed and put back, or replaced with a new part.
- "-" in a cell means that the adjustment is not required.

Table 5-1. Required Adjustment

Removal or Replacement Requiring Adjustment	Hardware Adjustment				Software Adjustment										
	Card Guide Mount Position Adj.	APTC Unit Mount Position Adj.	LF Drive Belt Tension Adj.	CR Drive Belt Tension Adj.	TOF Sensor Sensitivity Adj.	APTC Thickness Detection Adj.	APTC Detection Position Adj.	Top Margin Adj.	Left Margin Adj.	Bi-d Adj.	EEPROM Initializa-tion	F/W Update	Check Pattern Print	EEPROM Data Copy	Destina-tion & USB-ID setting
PR MECHA ASSY	-	-	-	-	1	2	3	4	5	6	-	-	7	-	-
ROM BOARD	-	-	-	-	-	-	-	-	-	-	-	-	2	1	-
ROM BOARD *	-	-	-	-	-	2	3	4	5	6	1	8	9	-	7
SP BELT	-	-	-	1	-	-	-	-	-	2	-	-	3	-	-
LF BELT	-	-	1	-	-	-	-	2	-	-	-	-	3	-	-
CARRIER UNIT	2	3	-	1	4	5	6	7	8	9	-	-	10	-	-
CARD GUIDE ASSY	1	-	-	-	2	-	-	-	-	-	-	-	3	-	-
APTC UNIT	-	1	-	-	-	-	-	-	-	-	-	-	2	-	-
APTC HP UNIT	-	1	-	-	-	-	-	-	-	-	-	-	2	-	-
DV ROLLER R UNIT	-	-	1	-	-	-	-	-	-	-	-	-	2	-	-
SP MOTOR ASSY	-	-	-	1	-	-	-	-	-	2	-	-	3	-	-
DV ROLLER F ASSY	-	-	1	-	-	-	-	-	-	-	-	-	2	-	-
PJS ROLLER ASSY	-	1	-	-	-	-	-	-	-	-	-	-	2	-	-
PJS HOLDER ASSY	-	1	2	-	-	-	-	-	-	-	-	-	3	-	-
PRINT HEAD	-	-	-	-	-	-	-	-	-	-	-	-	1	-	-

NOTE: * indicates adjustments required if the EEPROM Data Copy function has failed to backup the parameters stored in EEPROM.

5.1.2 Tools

The table below shows the tools required for adjustment and functional check.

Table 5-2. Required Tools

Specification		P/N
Adjustment Program		epson11482
APG Gauge Jig Proprietary tool	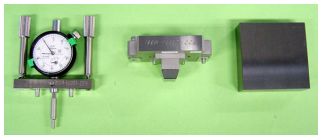	1422621
SSGEAR BLOCK JIG Proprietary tool		1422620
APG PT Jig Proprietary tool	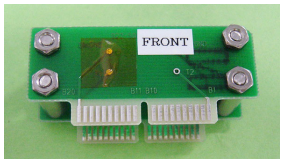	1422622
Tension Gauge,	400 gf, 1500 ~ 2000 gf	
Paper:	1 sheets 17 lb (64 g/m^2) or 0.08 mm equivalent 5 sheets of 11 lb (39.5 g/m^2) 10 sheets 13 lb (50 g/m^2) or 0.7 mm equivalent	
Allen wrench, 3 mm	(Used to fasten the APG Gauge Jig to the carriage)	

5.1.2.1 APG Gauge Jig

The APG Gauge Jig (#F957, P/N: 1422621) comprises the following parts, and each part is used separately or assembled together, depending on the adjustment. This section explains how to assemble and use the APG Gauge Jig.

Table 5-3. APG Gauge Jig

Name	
Dial gauge	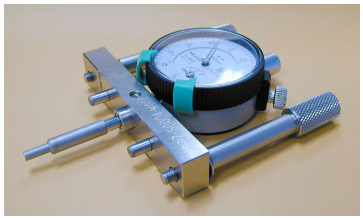
Dummy-head	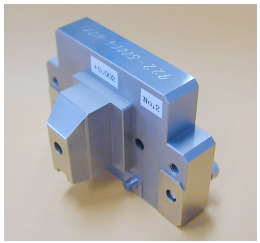
Level block	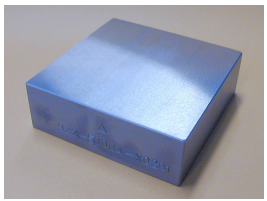

APG Gauge Jig adjustment use is summarized in the table below.

Table 5-4. Applicable Adjustment

Part	Adjustment	Ref.
Dummy-head only	APTC Thickness Detection	APTC thickness detection adjustment (p. 238)
Dial gauge + Dummy-head	Carriage Parallelism	Carriage parallelism adjustment (p. 229)
	APTC Detection Position	APTC detection position adjustment (p. 241)
	APTC Unit Mount Position *	APTC UNIT mount position adjustment (p. 224)

Note: *This adjustment can be made without using the APG Gauge Jig.

HOW to assemble the APG Gauge Jig

1. Carefully insert the tip of the dial gauge into the center hole in the back of the dummy-head.

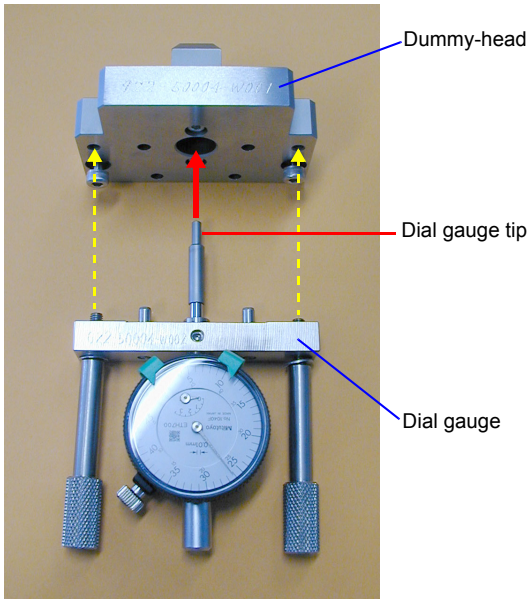

2. Secure the dial gauge to the dummy-head with the two thumb screws.

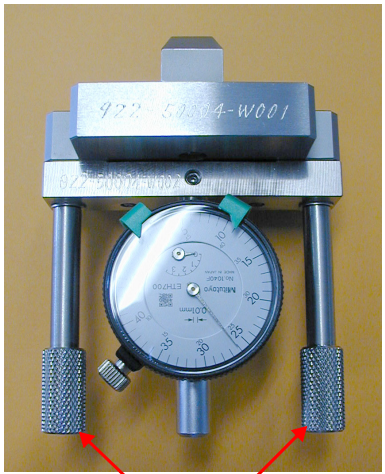

Zero indexing

After you assemble the APG Gauge Jig (Dial gauge + Dummy-head), you must “zero-out” or index the 0 (zero) point on the dial gauge using the level block.

1. Place the APG Gauge Jig on the level block.

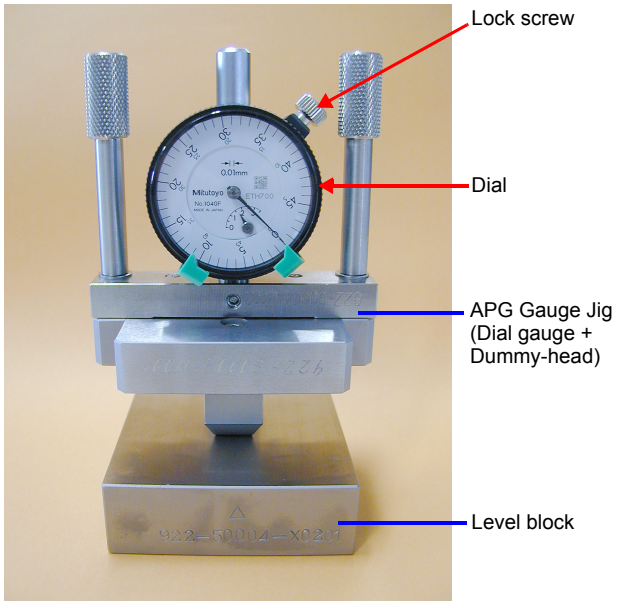

2. Loosen the lock screw that secures the rim of the gauge, and rotate the rim and dial face to align 0 (zero) with the long needle, as shown. Tighten the lock screw to secure the dial face position.

5.1.3 Adjustment program

Various adjustments are required if the repair of the unit includes the replacement or disassembly of certain components. A proprietary Adjustment Program is provided to facilitate adjustments and settings after repair and reassembly. This section describes how to use the Adjustment Program.

5.1.3.1 Preparation

System requirements

Windows (98 SE, 2000, XP)-based PC with Parallel or USB I/F

Installation

Decompress the supplied self-extracting archive file into a file folder by double-clicking on the program icon.

5.1.3.2 Running the program

To run the program, double-click on the program icon [APDFX9000_VerXX.exe]. When the main menu is displayed, select the appropriate value for each menu item as follows:

Model name: DFX-9000

Destination: Select the geographical area that matches your market.

Program Type: Particular Adjustment Mode (Preselected)

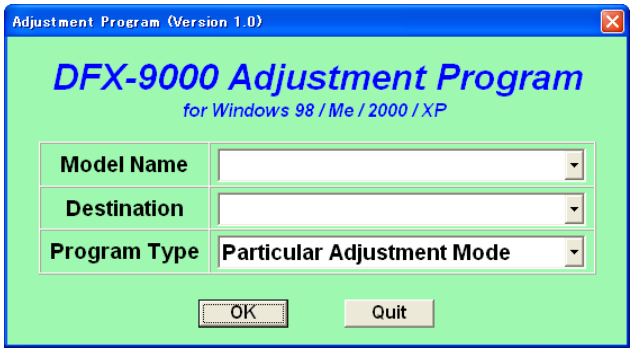

Next, select the interface port to which the DFX-9000 is connected. Click **Refresh**, and the program searches for printers connected to all ports so you can easily find the DFX-9000.

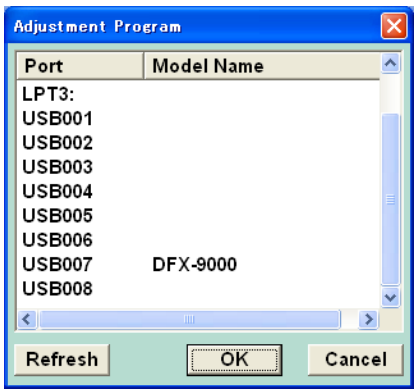

5.1.3.3 Individual adjustment mode

All available adjustments and settings can be selected manually and executed independently.

To start an adjustment, double-click on it in the menu.

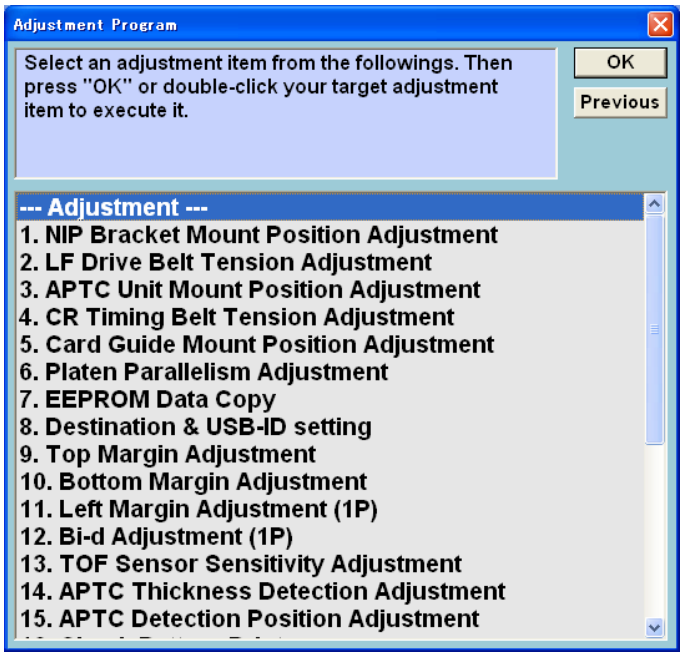

5.2 Hardware adjustment

This section describes the adjustment of the printer mechanism. Many of these adjustments are performed in conjunction with the Adjustment Programs software.

CAUTION

When performing any of the hardware adjustments, do not loosen any screws until specifically instructed to.

5.2.1 CR drive belt (SP BELT) tension adjustment

Summary

This adjustment is required after you remove or replace these parts:

- SP BELT
- CARRIER UNIT
- SP MOTOR ASSY

Tools / materials: Tension Gauge

Objective: 500 ~ 2000 gf measured tension on the SP BELT.

Adjustment Procedure

WARNING

Turn the printer off and disconnect the AC cable before you perform the following work.

CHECK POINT

Before performing this adjustment, remove these parts:

- Ribbon Cartridge
- FRONT COVER ASSY
- REAR UNIT
- OP UNIT
- UPPER UNIT

1. Tilt up the rear of the PR MECHA ASY and support it using the tilt bar. See 4.2.4.1 PR MECHA ASY (p.149)
2. Remove FAN3. See 4.2.4.19 FAN MOTORS (FAN1 MOTOR to FAN4 MOTOR) (p.208)

3. Move the CARRIER UNIT to left-most position.
4. At the center of the drive belt (SP BELT), push the belt with the tension gauge in the direction shown in Figure 5-1, and verify that the tension level is within 1500 ~ 2000 gf when the belt (front and rear) contacts itself. If the belt tension is not within the range, follow the steps below to adjust the tension.
5. Loosen the 3 screws that secure the SP MOTOR BRACKET.
6. Move the SP MOTOR BRACKET in the direction of the arrow shown in Figure 5-1 below, and temporarily secure it with screws.
7. Check the belt tension again, and repeat steps 5 and 6 above until the tension level is within the specified range.
8. Tighten the 3 screws that secure the SP MOTOR BRACKET.

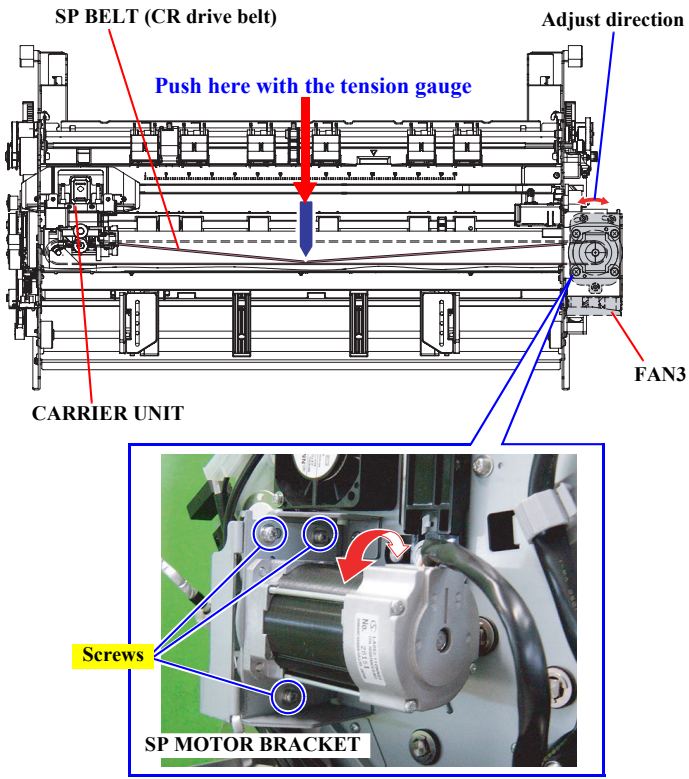

Figure 5-1. SP BELT (CR Drive Belt) Tension Adjustment

5.2.2 LF drive belt tension adjustment

Summary

This adjustment is required after you remove or replace these parts:

- LF BELT
- DV ROLLER R UNIT
- DV ROLLER F ASSY
- PJS ROLLER ASSY
- PJS HOLDER ASSY

Tools / materials: Tension Gauge

Objective: 400 ± 20 gf measured tension on the LF BELT.

Adjustment Procedure

CHECK POINT

Before performing this adjustment, remove these parts:

- FRONT COVER ASSY
- REAR UNIT
- OP UNIT
- UPPER UNIT

WARNING

Turn the printer off and disconnect the AC cable before you perform the following work.

1. Loosen the screw that secures the TENSION PULLEY UNIT, and then lightly tighten the screw to secure the unit temporarily.
2. Push the belt with the Tension Gauge at the location and direction shown in Figure 5-2, and verify that the tension level is 400 ± 20 gf when the belt is just touching the tension pulley as shown. If the belt tension is not correct, adjust the tension following the steps below.

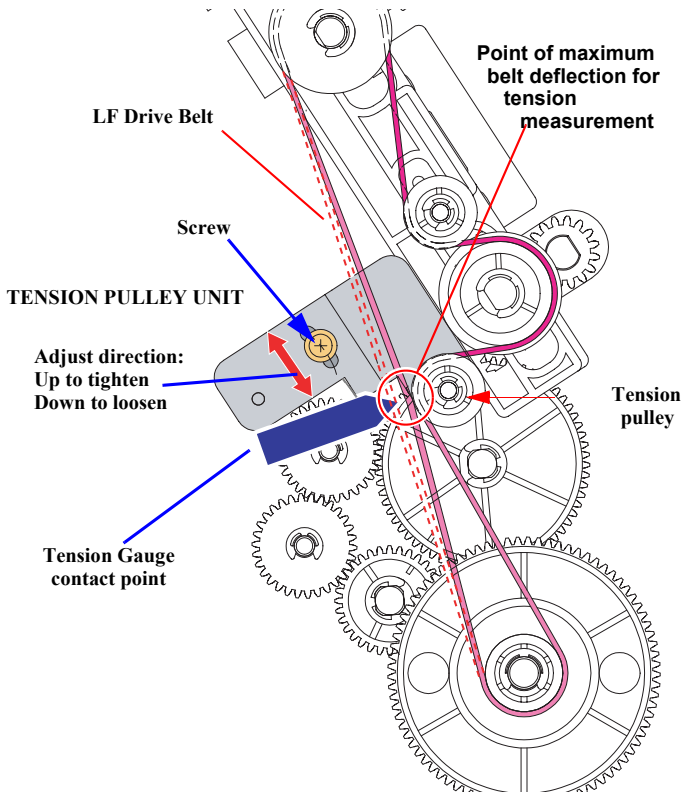

Figure 5-2. LF Drive Belt Tension Adjustment

3. Slightly loosen the screw securing the TENSION PULLEY UNIT, and move it in the direction of the arrows shown in Figure 5-2 as follows:

   Increase the tension: move the unit UP
   Decrease the tension: move the unit DOWN

4. Temporarily tighten the screw, and check the belt tension again. If it is within the specified range (400 ± 20 gf), secure the TENSION PULLEY UNIT by completely tightening the screw. If not, go back to Step 3, and re-adjust the tension.

5.2.3 APTC UNIT mount position adjustment

Summary

This procedure adjusts the backlash between a gear on the APTC Unit (Gear B) and the SS Gear on the end of the carriage guide shaft (Gear C). It is required after you remove or replace these parts:

- CARRIER UNIT
- APTC UNIT
- APTC HP UNIT
- PJS ROLER ASSY
- PJS HOLDER ASSY

Tools / materials: APG Gauge Jig

Objective: Backlash level = 0.03 ~ 0.07 mm between Gear B and Gear C

CHECK POINT

It is not mandatory to use the APG Gauge Jig for this adjustment. If the tool is used, however, the gear backlash level can be verified as a value on the Dial-Gauge.

Gear backlash: 0.03 ~ 0.07 mm = Dial gauge (APG Gauge Jig) reading of 0.002 ~ 0.006 mm, or about 1/2 the distance between two of the smallest (0.01 mm) markings on the dial.

WARNING

Turn the printer off and disconnect the AC cable before you perform the following work.

Adjustment Procedure

CHECK POINT

Before performing this adjustment, remove these parts.

- Ribbon Cartridge
- FRONT COVER ASSY
- REAR UNIT
- OP UNIT
- UPPER UNIT
- PRINT HEAD

1. Verify that the reference pin on the side frame is in the positioning hole of the APTC UNIT. Loosen the two screws that secure the unit, and push it downward so that Gear B is correctly contacting Gear C. Lightly tighten the screws to temporarily secure its position.

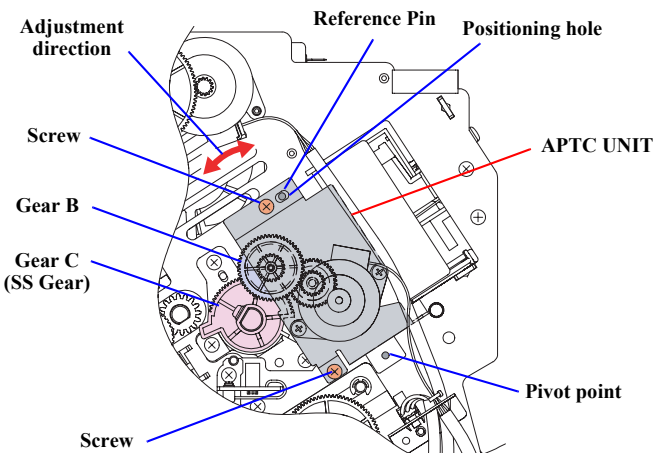

Figure 5-3. APTC Unit Mount Position Adjustment

2. Hold Gear C immobile with your finger, and slowly rotate Gear B back and forth. Check that the backlash level you could sense while rotating Gear B is about 0.03 ~ 0.07 mm.
3. If the backlash level is appropriate, tighten the screws to secure the APTC UNIT in that position. If the backlash is too small and both gears are engaged too tightly, go back to step 1, move the APTC UNIT slightly in the opposite direction (upward), and continue with step 2.

Adjustment Procedure using the APG Gauge Jig

1. Mount the APG Gauge Jig, as shown in figure below.

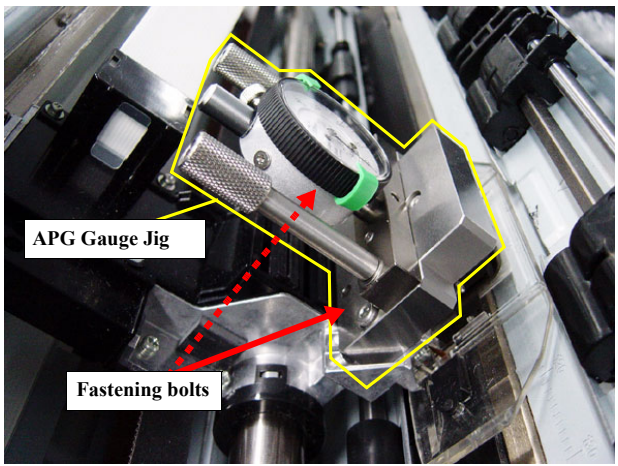

Figure 5-4. Mounting the APG Gauge Jig

2. Verify that the reference pin on the side frame is in the positioning hole of APTC UNIT. Loosen the two screws that secure the unit, and push it gently downward so that Gear B is correctly contacting Gear C. Lightly tighten the screws to temporarily secure its position.

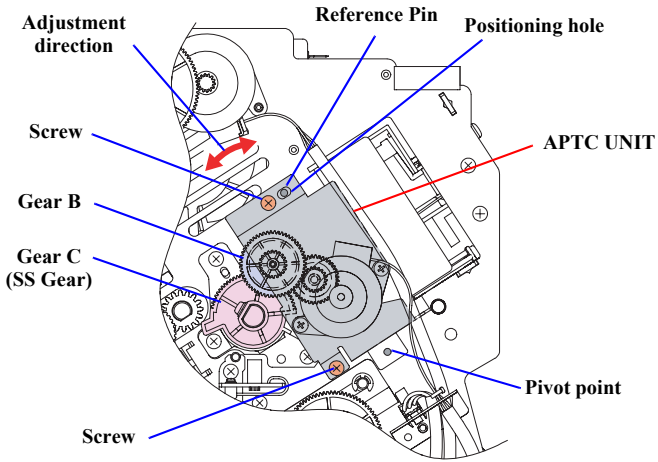

Figure 5-5. APTC Unit Mount Position Adjustment

3. Hold Gear B immobile with your finger, and slowly rotate Gear C (the SS Gear, attached to the left-end of carriage guide shaft) back and forth. Check that the needle deflection reading on the APG Gauge Jig is within 0.002 ~ 0.006 mm (about 1/2 the distance between two of the smallest markings on the dial). This is equivalent to a backlash of about 0.03 ~ 0.07 mm between Gear B and Gear C. If the backlash level is correct, tighten the screws to secure the APTC UNIT in that position.

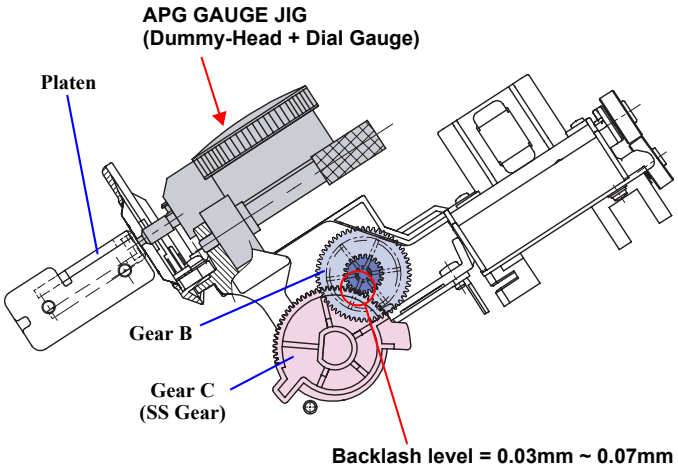

Backlash level: 0.03 ~ 0.07 mm =
Dial-Gauge needle movement: 0.002 ~ 0.006 mm

Figure 5-6. Backlash level check

5.2.4 Card guide mount position adjustment

Summary

Adjust the mounting position of the card guide on the carriage unit to set the correct gap between the surface of the card guide and the platen.

This adjustment is required after you remove or replace these parts:

- CARRIER UNIT
- CARD GUIDE ASSY

Tools / materials: SS Gear Block Jig
Paper: 4 sheets, 55kg / 17 lb (64g/m^2)

Objectives: 3 sheets of paper fit into the gap, but 4 sheets do not fit.

The gap between the inner surface of the CARD GUIDE and the left- and right-ends of the platen is consistent.

Adjustment Procedure

CHECK POINT

Before performing this adjustment, remove these parts.

- Ribbon Cartridge
- FRONT COVER ASSY
- REAR UNIT
- OP UNIT
- UPPER UNIT
- PRINT HEAD
- RIBBON MASK

WARNING

Turn the printer off, and disconnect the AC cable before you perform the following work.

1. Install the CARD GUIDE on the carriage and lightly tighten the screws to secure the CARD GUIDE temporarily.
2. Install the SS Gear Block Jig on the Stopper Stud on the left frame as shown in Figure 5-7. Turn the SS Gear, attached to the left-end of carriage guide shaft, until it firmly contacts the jig.

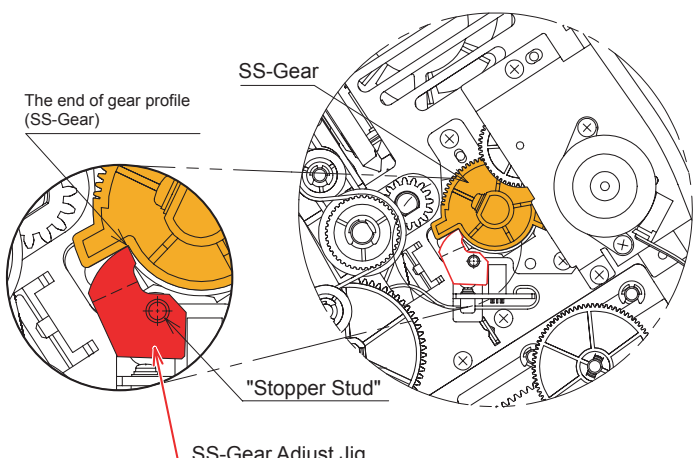

Figure 5-7. Installing the SS-Gear Block Jig

3. Insert three sheets of paper into the gap between the card guide and the platen as shown in Figure 5-8, and lightly push the card guide against the paper. Then, secure the card guide in position by tightening the two screws.
4. Refer to Figure 5-9 and verify that three sheets of paper fit in a gap between the platen and the card guide, but four will not fit. If the gap is not correct, repeat from the step 3.

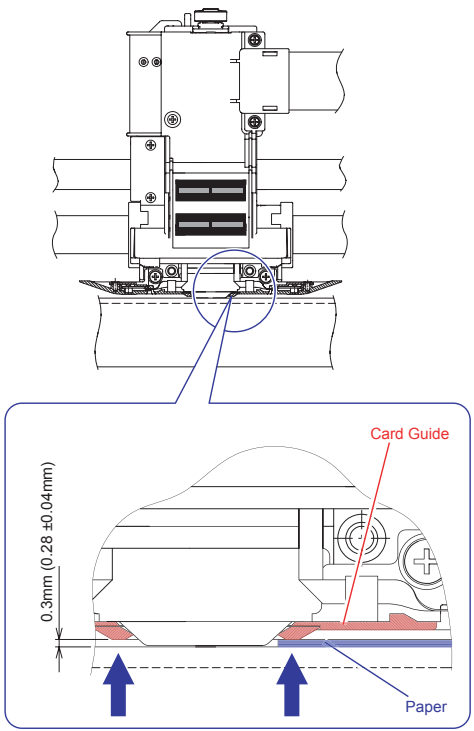

Figure 5-8. Card Guide Mount Position Adjustment

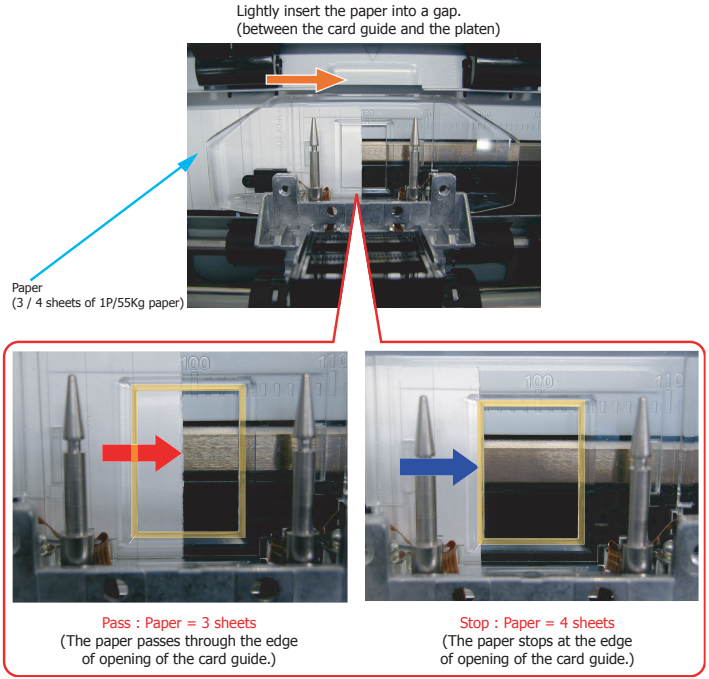

Figure 5-9. Judging the Gap Level

5.2.5 Carriage parallelism adjustment

Summary

This adjustment is required when the UPPER ANGLE is loosened. The UPPER ANGLE supports the bearings attached to the carriage as shown in Figure 5-10, and carriage parallelism is defined by the position of the UPPER ANGLE.

Tools / materials: APG Gauge Jig
SSGear Block Jig

CAUTION

Dropping or bending these tools can damage them. Please handle them with care.

Objective: 0.39 ± 0.01 mm consistent gap, adjusted and measured in three places.

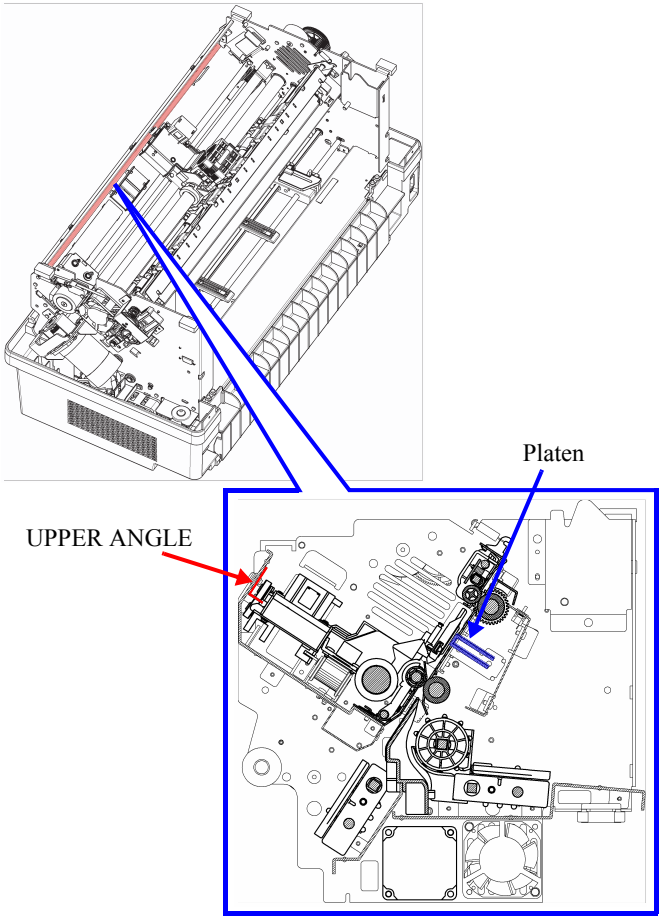

Figure 5-10. UPPER ANGLE

Adjustment Procedure

CHECK POINT

Before performing this adjustment, remove these parts:

- Ribbon Cartridge
- FRONT COVER ASSY
- REAR UNIT
- OP UNIT
- UPPER UNIT
- PRINT HEAD

WARNING

Turn the printer off and disconnect the AC cable before you perform the following work.

1. Assemble the APG Gauge Jig (attach the Dial-Gauge to the Dummy-Head), and adjust the 0 (zero) position of the Dial gauge. Refer to APG Gauge Jig (p. 215) for details.
2. Install the APG Gauge Jig on the carriage unit. See Figure 5-11.

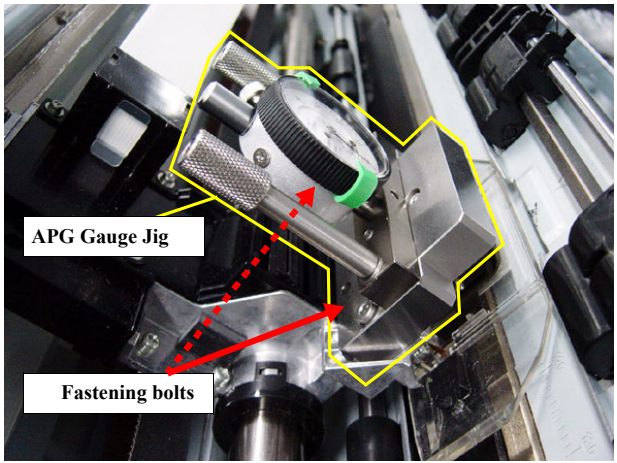

Figure 5-11. Mounting the APG Gauge Jig

3. Install the SSGear Block Jig on the Stopper, Stud as shown in Figure 5-12.
4. Turn the SS-GEAR on the carriage guide shaft (left-end) counter-clockwise until the SS-GEAR firmly contacts the SSGear Block Jig.

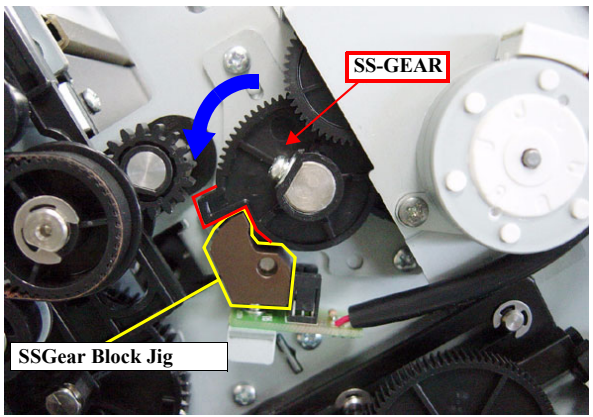

Figure 5-12. Attaching SSGEAR BLOCK JIG

5. Move the carriage (Carrier) unit to the left-most position.
6. Loosen the 3 screws that secure the Upper Angle and lightly re-tighten them to secure it temporarily. See Figure 5-13.
7. Slowly move the UPPER ANGLE upward or downward, while reading the value on the dial-gauge. Find the position where the dial reads 0.39 mm ± 0.01 mm. See Figure 5-14 on page 232 to see how to read the value on the Dial gauge.

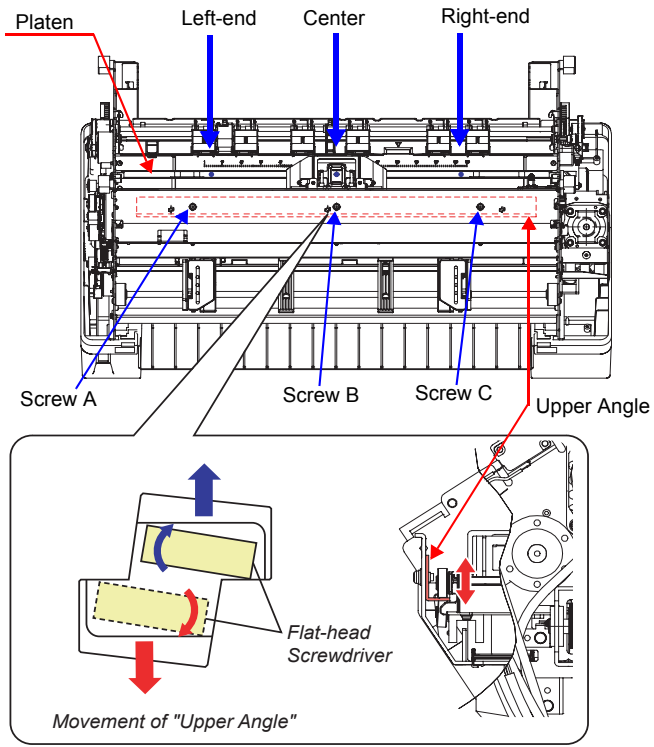

Adjustment Needed	Upper Angle Movement
Gap too large	Lower
Gap too small	Raise

Figure 5-13. Platen Parallelism

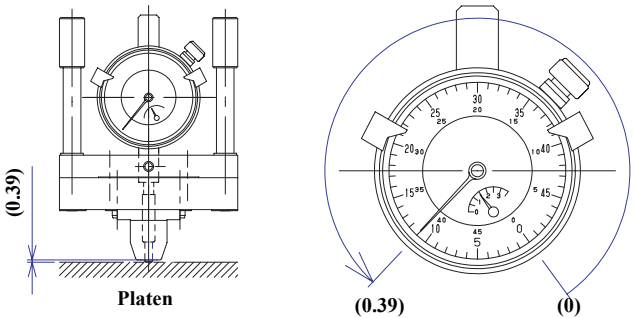

Figure 5-14. How to read the value on the dial-gauge

8. Tighten Screw A.
9. Move the carriage unit to the right-most position, and adjust the position of the Upper Angle in the same way as step 7.
10. Tighten Screw C.
11. Move the carriage unit to the center, and adjust the position of the Upper Angle as in step 7.
12. Tighten Screw B.
13. Move the carriage unit again to left-most, right-most, and center of the carriage, and check that the value on the dial-gauge is consistently within the correct range. If not, repeat the procedure from Step 6 to re-adjust.
14. When the adjustment is complete, remove the APG Gauge Jig and SSGear Block Jig from the printer.

5.2.6 Nip bracket mount position adjustment

Summary

Adjusts the backlash between the Nip Roller gear and the drive gears of the Paper Exit Roller.

This adjustment is required after you remove or replace these parts:

- LF BELT
- DV ROLLER R UNIT
- DV ROLLER F ASSY
- PJS ROLLER ASSY
- PJS HOLDER ASSY

Objective: Backlash of 0.01 ~ 0.1 mm

Adjustment Procedure

CHECK POINT

Before performing this adjustment, remove the parts below.

- FRONT COVER ASSY
- REAR UNIT
- OP UNIT
- UPPER UNIT

WARNING

Turn the printer off and disconnect the AC cable before you perform the following work.

1. Refer to the figures below. Make sure that the #1 Nip roller and the Exit roller are in the closed position.

#1 Nip roller

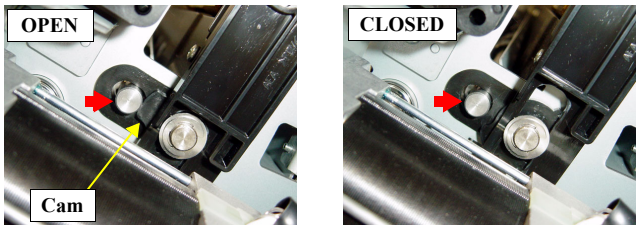

Exit roller

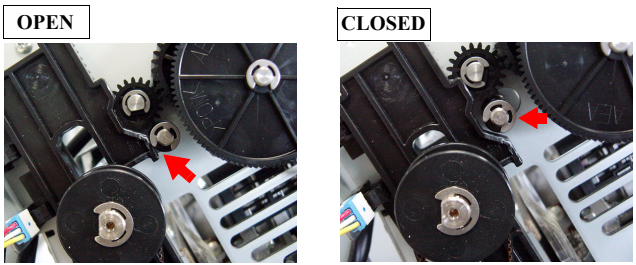

Figure 5-15. #1 Nip and Exit Roller Open and Closed positions

2. Loosen the 2 screws that secure the Nip Bracket Unit.
3. Check that the reference pin on the side frame is in the positioning hole of Nip Bracket Unit. Push the unit downward so that Gear B is correctly contacting Gear C and Gear D. Lightly tighten the screws to temporarily secure the unit.

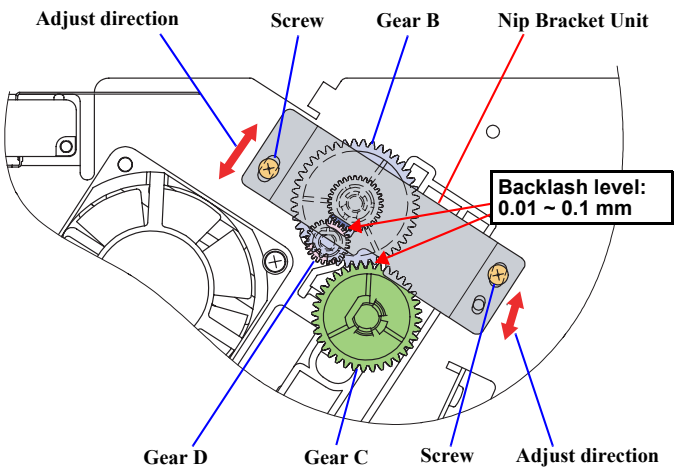

Figure 5-16. Nip Bracket Mount Position Adjustment

4. Slowly move the Nip Bracket Unit up and down, and find the position where the backlash is about 0.01 ~ 0.1 mm between the gears listed below.
   - Between Gear B and Gear C
   - Between Gear B and Gear D

CHECK POINT

The amount of backlash between Gear B and Gear D can be checked visually by looking through the hole in the frame of the Nip Bracket Unit and Gear B.

5.3 Software adjustment

This section describes the software adjustments of the printer.

5.3.1 TOF sensor sensitivity adjustment

Summary

Adjusts the output signal level of the TOF (Top of Form) Sensor to an appropriate level.

This adjustment is required after you remove or replace these parts:

- PR MECHA ASSY
- CARRIER UNIT
- CARD GUIDE ASSY
- ROM BOARD (only when the EEPROM Data Copy function fails)

Tools / materials: Adjustment Program

Objective: Output Voltage: 2.4 ~ 2.75 V

Adjustment Procedure

1. Open the top cover and remove the Ribbon Cartridge. Then, turn the printer ON.
2. From the Adjustment Program, select the **TOF Sensor Sensitivity Adjustment**.

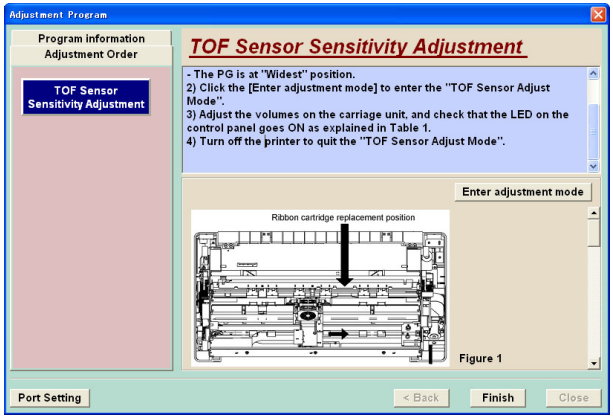

Figure 5-17. TOF Sensor Sensitivity Adjustment screen

3. Click **Enter adjustment mode** to enter the TOF Sensor Adjust Mode, and verify that:
   - The CARRIER UNIT is at the Ribbon cartridge replacement position. (See Figure 5-18).
   - The Platen Gap is at the widest position once the mechanical initialization has completed.

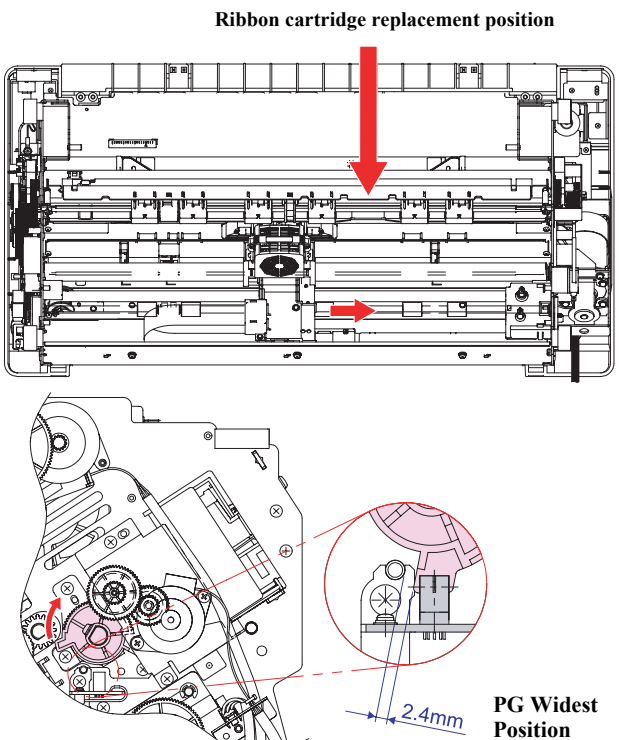

Figure 5-18. Mechanical Position Check

4. Locate the two variable resistor (VR) signal adjustment screws on the CARRIER UNIT. See Figure 5-19.

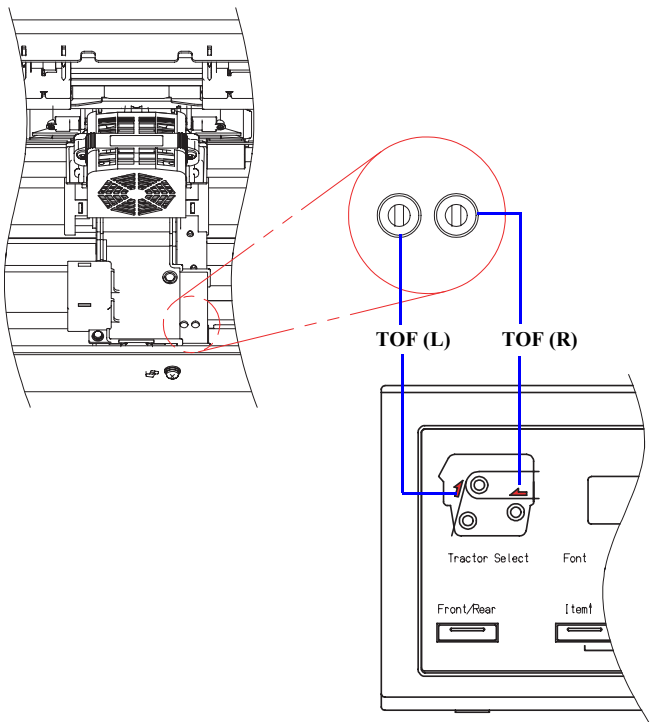

Figure 5-19. Location of TOF Signal Adjustment Screws

5. For each variable resistor adjustment screw: First turn it counter-clockwise until it stops. The corresponding LED (See Figure 5-19) is not lit. Slowly turn the screw clockwise until the LED lights and stays on.

CHECK POINT

Turn the adjustment screws counter-clockwise one complete turn, even if both LEDs are lit at the beginning of this adjustment.

6. Turn off the printer to exit the TOF Sensor Sensitivity adjustment mode.

5.3.2 APTC thickness detection adjustment

CHECK POINT

Before performing this adjustment, make sure to perform the TOF sensor sensitivity adjustment (p. 235).

Summary

The rotation-center of the carriage shaft is offset at both ends to allow the platen gap to be adjusted, and the eccentricity of the shaft is approximately 1.0 mm. The precise amount of this offset varies somewhat within allowable manufacturing tolerances, but this variation increases as the platen gap increases: It becomes bigger with thicker paper, compared to thinner paper, and affects the number of motor-steps detected by the APTC sensor for a given paper thickness. This adjustment is performed to compensate for the platen-gap variation of each printer's mechanism.

The table below shows the possible variation of the steps detected by the APTC sensor.

Table 5-5. APTC sensor detected-steps variance

Paper	Thickness	Motor-step range / variance
1 Sheet, 64 g/m^2 (17 lb)	0.08 mm	14 - 15 steps / 1 step
10 Sheets, 50 g/m^2 (13.3 lb)	0.7 mm	119 - 127 steps / 8 steps

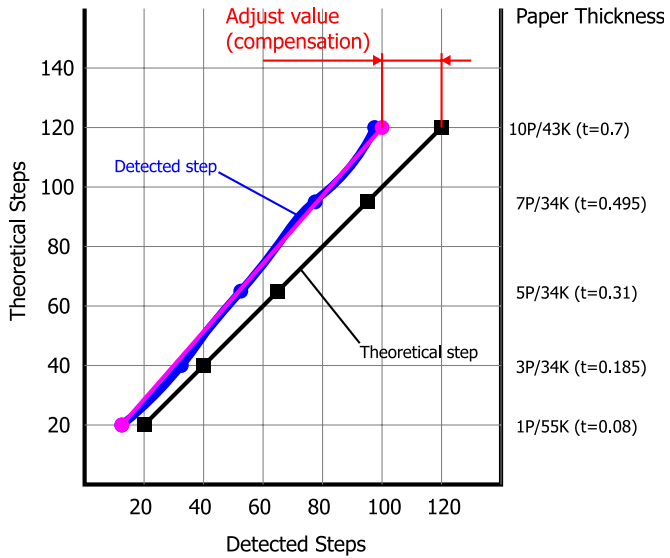

Figure 5-20. APTC variance compensation adjustment

This adjustment is required after you remove or replace these parts:

- PR MECHA ASSY
- CARRIER UNIT
- ROM BOARD (when the EEPROM Data Copy function fails)

Tools / materials: Adjustment Program

Paper: 1 sheet of 64 g/m^2 (17 lb)
10 sheets of 50 g/m^2 (13 lb)

APG Gauge Jig (P/N: 1422621)

APG PT Jig (P/N: 1422622)

CHECK POINT

Only the **Dummy-Head** part of the APG GAUGE JIG is used for this adjustment.

Adjustment Procedure

1. Open the Top Cover and remove the Ribbon Cartridge and PRINT HEAD.
2. Install the Dummy-Head part of the APG Gauge Jig, and the APG PT Jig, in place of the print head on the CARRIER UNIT, as shown in the figure below.

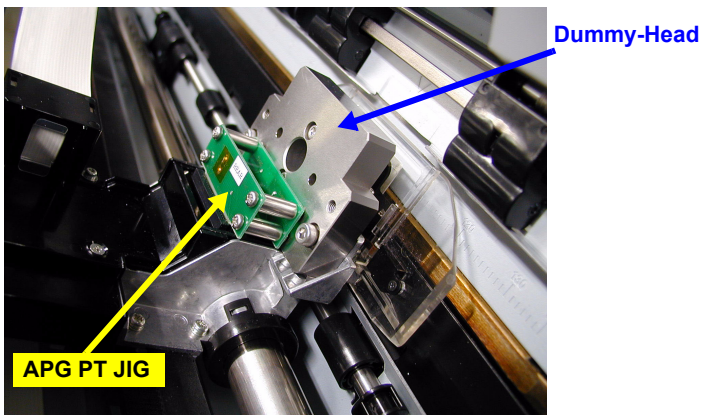

Figure 5-21. Installing the Jigs

CAUTION

When installing APG PT JIG on the printer, be careful with its front/back orientation. The correct orientation is indicated by a label attached to the jig.

3. Install the Ribbon Cartridge.
4. Close the top cover and turn the printer ON.
5. Set a single sheet of 64 g/m^2 (17 lb) paper on the front tractor, and press [**Load**] to feed the paper into the mechanism.

6. From the Adjustment Program, execute the **APTC Thickness Detection Adjustment**.

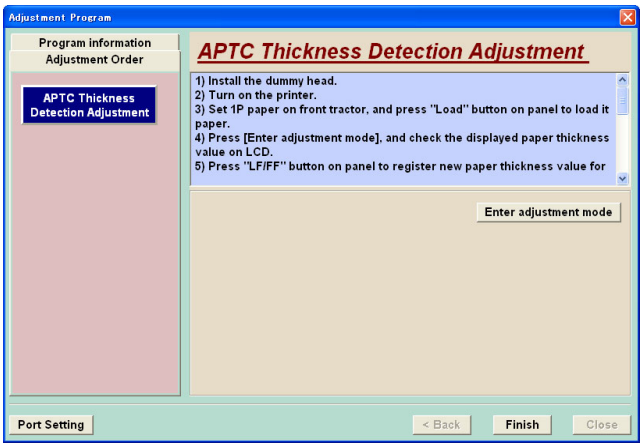

Figure 5-22. APTC Thickness Detection Adjustment screen

7. Click **Enter adjustment mode**, and check the displayed paper thickness value on the printer's Operation Panel LCD.

```
APG Count Write
1P = XXXX
```

8. Press the [**Pause**] button on the Operation Panel to register the new paper thickness value for a single sheet of paper.
9. Turn OFF the printer.

CAUTION

After registering the adjustment value by pressing the [Pause] button, be sure to turn OFF the printer.

The value is only stored in EEPROM at power OFF.

10. Turn ON the printer.
11. Press the [**LF/FF**] button on Operation Panel to eject the paper.
12. Set 10 sheets of stacked or folded 50 g/m^2 (13 lb) paper on the front tractor, and press the [**Load**] button on the Operation Panel to load the paper into the mechanism.
13. Click **Enter adjustment mode**, and check the displayed paper thickness value on the printer's Operation Panel LCD.
14. Press the [**Pause**] button on the panel to register the new paper thickness value for 10 sheets of paper.
15. Turn the printer OFF.
16. Turn the printer ON again, and press the [**LF/FF**] button to eject the paper.
17. Turn the printer OFF.
18. Remove the jigs from the printer.

5.3.3 APTC detection position adjustment

CHECK POINT

Before performing this adjustment, make sure to perform the “TOF Sensor Sensitivity Adjustment” Refer to TOF sensor sensitivity adjustment (p. 235).

Summary

The APTC mechanism compares the number of APTC Motor drive steps detected from home-position to the platen, and home-position to the paper. The difference between these two distances is assumed to be the thickness of the paper.

The number of APTC Motor drive steps to move the printhead a given distance, e.g., from the APTC home position to the platen or paper, is predetermined based on assumed mechanical dimensions. Due to manufacturing variances of the components that comprise the APTC mechanism, (APTC Motor, Carrier mechanism), the timing used to detect the contact of the printhead with a target also varies, and this affects the detection precision.

This adjustment is performed to determine the number of APTC Motor drive steps necessary to compensate for the dimensional variances of the APTC mechanism.

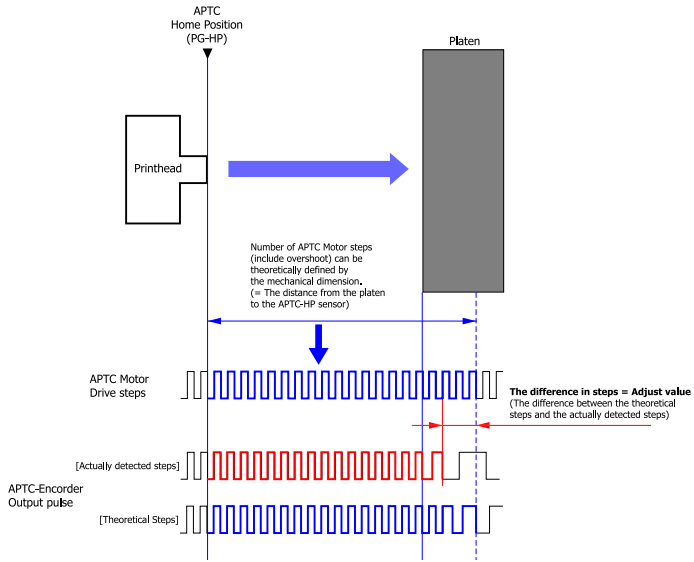

Figure 5-23. APTC detect position variance

This adjustment is required after you remove or replace these parts:

- PR MECHA ASSY
- CARRIER UNIT
- ROM BOARD (only when the EEPROM Data Copy fails)

Tools / materials: Adjustment Program

Paper: 1 sheet of 64 g/m^2 (17 lb) paper

10 sheets of 50 g/m^2 (13 lb) paper

APG PT Jig (P/N: 1422622)

APG Gauge Jig (P/N: 1422621)

Objective: Adjustment values:

0.39 mm ± 0.01 mm, Left position (11th column)

0.39 mm ± 0.03 mm, Center (68th column) and Right (136th column) positions

Verification values:

0.39 mm ± 0.03 mm at each position

Adjustment Procedure

1. Open the top cover and then remove the Ribbon Cartridge and PRINT HEAD.
2. Install the Dummy-Head part of the APG Gauge Jig, and the APG PT Jig, on the CARRIER UNIT.

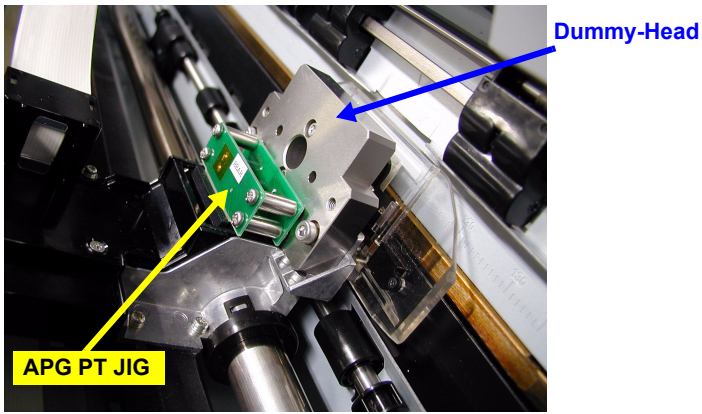

Figure 5-24. Installing the Jigs

CAUTION

When installing APG PT JIG, be careful with its front/back orientation. The correct orientation is indicated by a label on the jig.

3. Install the Ribbon Cartridge.
4. Close the top cover and turn the printer ON.

5. From the Adjustment Program, select the **APTC Detection Position Adjustment**.

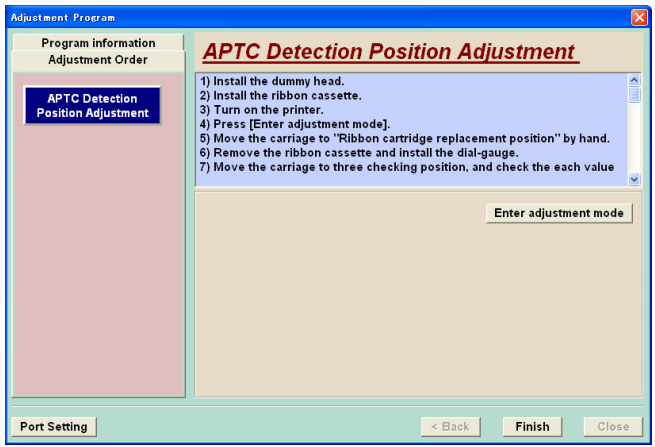

Figure 5-25. APTC Detection Position Adjustment screen

6. Click **Enter adjustment mode**, and check the displayed paper thickness value on the printers' LCD panel.

```
APG Adjust Platn
+XX
```

7. Open the top cover and move the CARRIER UNIT to the Ribbon cartridge replacement position by hand. Then, remove the Ribbon Cartridge.

8. Attach the Dial-Gauge part of the APG Gauge Jig to the Dummy-Head already installed on the CARRIER UNIT, as shown.

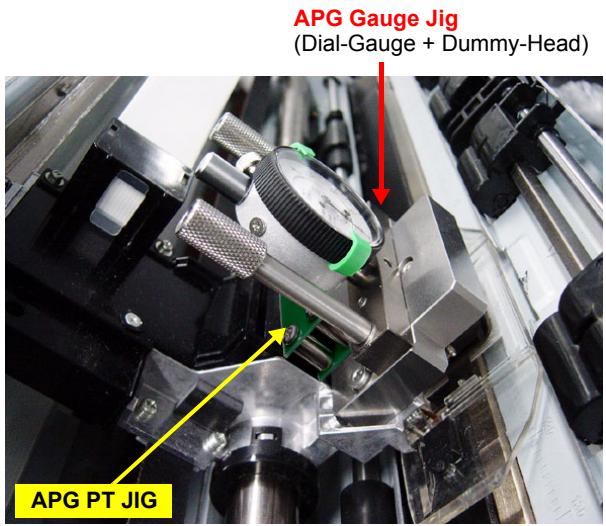

Figure 5-26. Installing the Jigs

9. Move the Carriage by hand to each of the three measurement positions: 11th, 68th, and 136th column, and verify that the value on the Dial-Gauge at each location is within the allowable range.
   - 0.39 mm ± 0.01 mm on the Left
   - 0.39 mm ± 0.03 mm in the Center and on the Right

10. If the gap is outside the specified range, move the Carriage to the first position (11th column) and adjust the gap by pressing the [**Micro Feed**] buttons on Operation Panel.

CHECK POINT

The adjustable range is ±25 steps, where 1 step = 0.005 mm

11. When the gap values at each position are within specifications, press the [**Pause**] button to register the adjustment value.
12. Turn OFF the printer to save the values to EEPROM.

CAUTION

After registering the adjustment value by pressing the [Pause] button, be sure to turn OFF the printer. The registered value is only stored in EEPROM during the power OFF process.

13. Move the Carriage to the Ribbon cartridge replacement position, and remove Dial-Gauge from the Dummy-Head, and install the ribbon cartridge.
14. Close the top cover and turn the printer ON.
15. Set a single sheet of 64 g/m^2 (17 lb) paper on the front tractor and load it by pressing the [**Load**] button.
16. In the Adjustment Program, click **Enter adjustment mode**.
17. Open the top cover and move the carriage to the Ribbon cartridge replacement position by hand.
18. Remove the Ribbon Cartridge and attach the Dial-Gauge to the Dummy-Head on the Carriage.
19. Move the carriage to three measurement positions, and verify that the value on the Dial-Gauge is still within the Verification value specifications: 0.31 mm ± 0.03 mm at all three positions.
20. If any gap is outside the specifications, adjust the gap by pressing the [**Micro Feed**] buttons on panel.
21. When the gap values each position are within specification, press the [**Pause**] button to register the adjustment value.
22. Turn OFF the printer.
23. Move the Carriage to the Ribbon cartridge replacement position and remove the Dial-Gauge and install the Ribbon Cartridge.
24. Close the top cover and turn ON the printer again.
25. Set 10 sheets of 50 g/m^2 (13 lb) paper on the front tractor and load it by pressing the [**Load**] button.
26. Repeat step 16 to step 19 again. If any gap measurement is outside the specification, repeat step 20 to step 21.
27. Turn OFF the printer.
28. Move the Carriage to the Ribbon cartridge replacement position and remove the Ribbon cartridge and all the Jigs.

5.3.4 Top margin adjustment

This procedure adjusts the print start position from the top paper edge.

This adjustment is required after you remove or replace these parts:

- PR MECHA ASSY
- CARRIER UNIT
- LF BELT
- ROM BOARD (only when the EEPROM Data Copy fails)

Tools / materials: Adjustment Program

Paper: 1 sheet of 64 g/m^2 (17 lb)

Objective: Normal paper mode (Front/Rear tractor):
Margin A = 8.0 ~ 9.0 mm

Black paper mode (Front/Rear tractor):
Margin A = 7.5 ~ 9.5 mm

(See Figure 5-28.)

Adjustment Procedure

1. Set one sheet of paper on the tractor, and press the [**Load**] button on the Operator Panel.
2. From the Adjustment Program, select **Top Margin Adjustment**.
3. Select either **Front Tractor** or **Rear Tractor**, depending on where you loaded the paper.

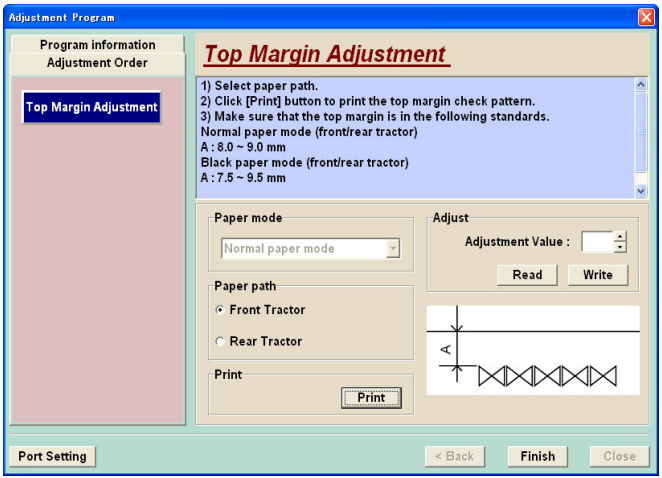

Figure 5-27. Top Margin Adjustment screen

4. Click **Print** to print the top margin check pattern.

5. Measure the distance (mm), from the top edge of the paper to the printed pattern, as shown in Figure 5-28, and confirm that it is within specification.

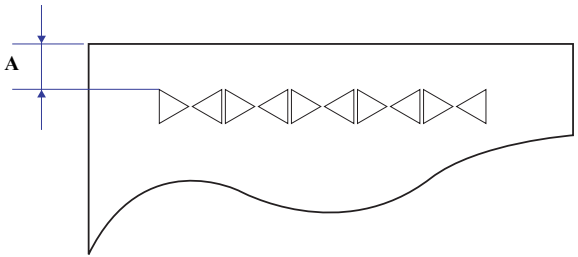

Figure 5-28. Top margin check pattern

6. If the margin is not within specifications, select the adjustment value by referring to the table below, and input the value in the **Adjust** box in the Adjustment Program. Then, click on the **Write** button.

Paper mode	To increase top margin	To decrease top margin	Target margin
Normal paper mode	Input **1** ~ **40**	Input **-1** ~ **-40**	8.0 ~ 9.0 mm
Black paper mode	Input **1** ~ **80**	Input **-1** ~ **-80**	7.5 ~ 9.5 mm

CHECK POINT

To estimate the adjustment value to enter, use this formula:
1 step = 0.059 mm (1/432 inch).

Example:
A value of 9 increases the top margin by 0.53 mm.

7. Turn the printer OFF and click **Finish** to complete the adjustment.

5.3.5 Left margin adjustment

Adjust the print start position from the left edge of the paper.

This adjustment is required after you remove or replace these parts:

- PR MECHA ASSY
- CARRIER UNIT
- ROM BOARD (only when the EEPROM Data Copy fails)

Tools / materials: Adjustment Program

Paper: 1 sheet of 64 g/m^2 (15 lb)
5 sheets of 39.5 g/m^2 (10.5 lb)
10 sheets of 50 g/m^2 (13 lb)

Objective: Left margin of 116.8 mm ± 0.5 mm (4.6 ± 0.2 inch) measured from inside Side Frame, Left.

Adjustment Procedure

1. Set the 1, 5 or 10 sheets of paper in the tractor, and load the paper by pressing the [**Load**] button.
2. From the Adjustment Program, select the **Left Margin Adjustment**.
3. Click **Print** in **Mode A** to print the left margin check pattern with the adjustment value currently saved in EEPROM.
4. Refer to Figure 5-30, and measure the distance between the printed left line and the left frame. Check whether the distance matches the specification: 116.8 mm ± 0.5 mm.
5. If the line needs adjustment, type an adjustment value for each mode into each of the input boxes, where 1 step = 1/480 inch.

   A negative (e.g., "-12") value moves the print position to the right, and a positive value moves it to the left.
6. Click **Write** to save the new parameter for next print test.
7. Click **Print** again to print the left margin check pattern with the new parameters.
8. Repeat Step 4 to Step 7 until the margin is within specifications.
9. Make the same adjustment for each print mode, and each paper thickness.

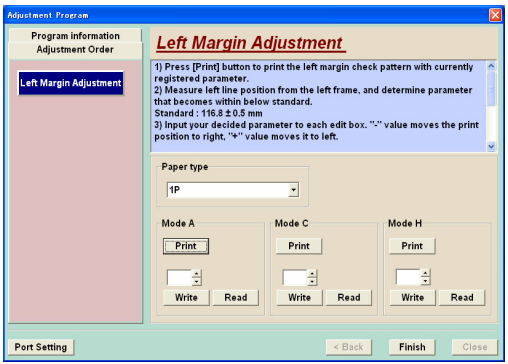

Figure 5-29. Left Margin Adjustment screen

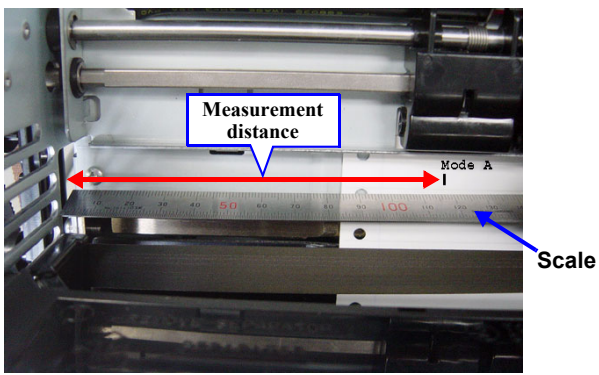

Figure 5-30. Measurement point

5.3.6 Bottom margin adjustment

This procedure adjusts the position of the last line of print on the bottom edge of the paper. This adjustment is required after you remove or replace these parts:

- PR MECHA ASSY
- CARRIER UNIT
- ROM BOARD (only when the EEPROM Data Copy fails)

Tools / materials: Adjustment Program

Paper: 1 sheet of 64 g/m^2 (17 lb)

Objective: Normal paper bottom margin:
2.1 ~ 3.1 mm (0.08 ~ 0.12 inch)

Black paper bottom margin:
2.6 ~ 4.6 mm (0.10 ~ 0.18 inch)

Adjustment Procedure

1. Set a single sheet of paper on the tractor, and load it by pressing [**Load**].
2. From the Adjustment Program, select **Bottom Margin Adjustment**.
3. Click **Print** to print the bottom margin check pattern using the currently saved parameters.

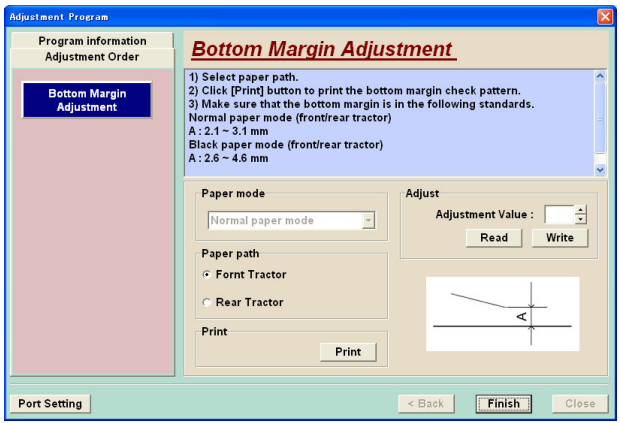

Figure 5-31. Bottom Margin Adjustment screen

4. Measure the distance (mm), from the bottom edge of the paper to the center of the bottom dot of the printed pattern, as shown in Figure 5-32. If it is within the specified range, no adjustment is needed. Click **Finish**.

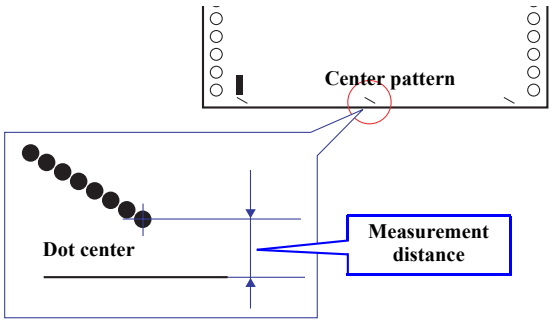

Figure 5-32. Bottom margin check pattern

5. If it is out of range, refer to the table below and input an adjustment value that will move the margin into the specified range.

Paper mode	To increase bottom margin	To decrease bottom margin	Target margin
Normal paper mode	1 ~ 40	-1 ~ -40	2.1 ~ 3.1 mm (0.08 ~ 0.12 in.)
Black paper mode	1 ~ 80	-1 ~ -80	2.6 ~ 4.6 mm (0.10 ~ 0.18 in.)

CHECK POINT

To estimate the adjustment value to enter, use this formula:
1 step = 0.059 mm (1/432 inch).

Example:
A value of 9 increases the bottom margin by 0.53 mm.

6. Click **Write** to save the new parameter for the next test print.
7. Click **Print** to print the check pattern with the new parameter.
8. Repeat Step 4 to Step 7 until the bottom margin is within specifications.

5.3.7 Bi-D adjustment

This adjustment is required after you remove or replace these parts:

- PR MECHA ASSY
- SP BELT
- CARRIER UNIT
- SP MOTOR ASSY
- ROM BOARD (only when the EEPROM Data Copy fails)

Tools / materials: Adjustment Program

Paper: 1 sheet of 64 g/m^2 (17 lb)
5 sheets of 39.5 g/m^2 (10.5 lb)
10 sheets of 50 g/m^2 (13.3 lb)

Objective: Bi-directional printing with the following precision:

Mode A ~ C: 0.25 mm
Mode D ~ G: 0.15 mm
Mode H ~ L: 0.10 mm

Adjustment Procedure

CHECK POINT

The print character pitch for this adjustment is 10cpi.

1. Set the 1, 5 or 10 sheets of paper on the tractor and load it by pressing [**Load**].
2. From the Adjustment Program, select the **Bi-D Adjustment**.

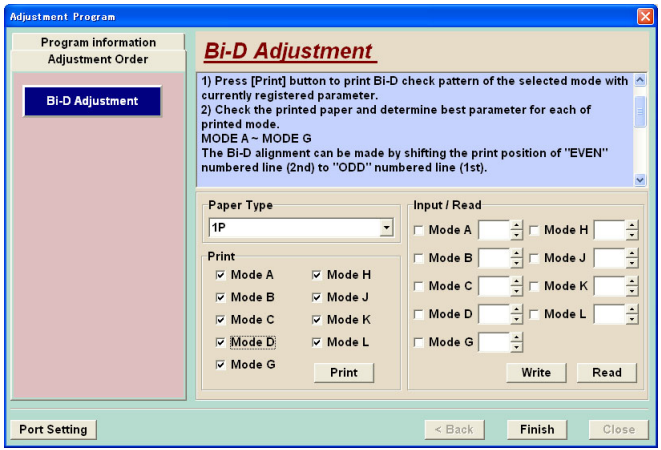

Figure 5-33. "Bi-D Adjustment" screen

3. Select the printing speed mode(s) that need adjustment, and click **Print** to print the Bi-D check pattern of the selected mode(s) using the current parameters.

4. Check the printout and determine the best parameter for each of printed mode.
   - Mode A ~ Mode G:
     The Bi-D print alignment is made by shifting the print position of “EVEN” numbered lines (2nd) to align with the “ODD” numbered line (1st).
   - Mode H ~ Mode L:
     The Bi-D print alignment is made by shifting the print position of “EVEN” passes (2nd and 4th) to align with the “ODD” passes (1st and 3rd).
5. Type the new parameters in each edit box. “-” (negative) values move the print position to right; “+” (positive) values move it to left.

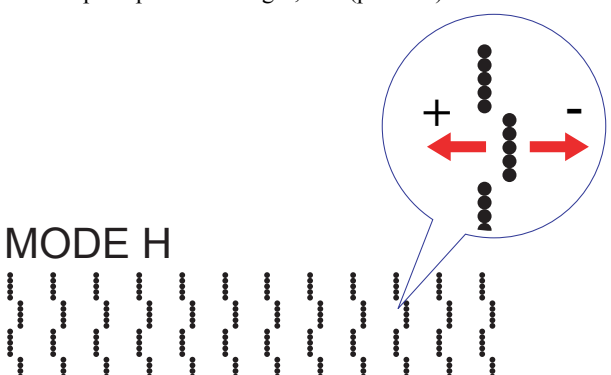

Figure 5-34. Bi-D check pattern

6. Click **Write** to save the new parameters for the next test print.
7. Click **Print** to print a new Bi-D check pattern using the new parameters.
8. Repeat Step 3 to Step 7 until you get the best aligned pattern.

5.4 Additional functions

EEPROM Data Copy

CAUTION

When repair of the printer requires replacing the ROM BOARD, be sure to try to backup the EEPROM data using this function. If the backup is successful and the data restored to the replacement board, many of the adjustments can be omitted.

By executing this function, the contents of EEPROM on the ROM BOARD can be retrieved by the connected PC, saved, and then restored to the replacement ROM BOARD.

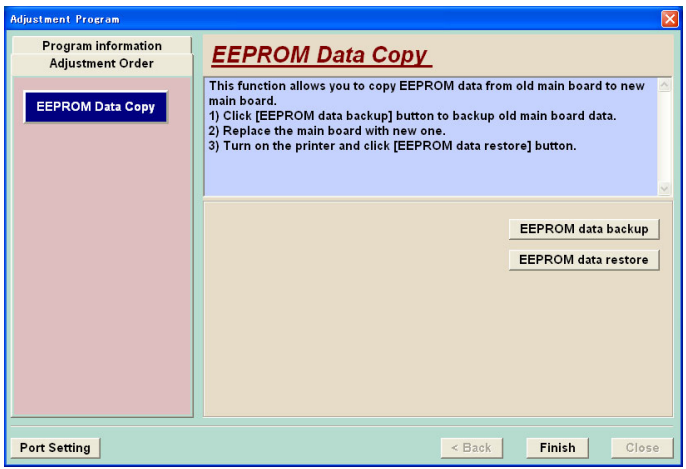

Main Board Initialization

When the ROM BOARD (WD04AB Board) is replaced with a new one, the following function should be executed to define the parameters specifying the product configuration (destination specific settings), and the USB-ID.

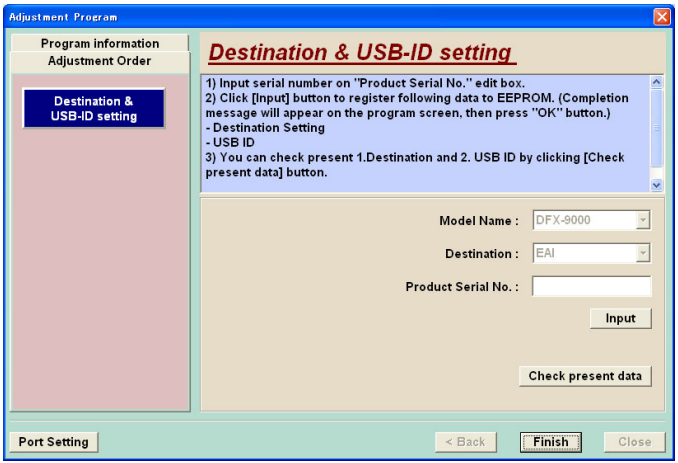

A USB-ID, unique to each printer, is generated based on the product serial number.

Check Pattern Print

This function causes the printer to print out the current parameters stored in EEPROM, as well as the check patterns for Bi-D alignment and printhead pin check. If necessary, the Bi-D Alignment adjustment and the EEPROM Initialization can be executed from within this menu without having to return to the main menu.

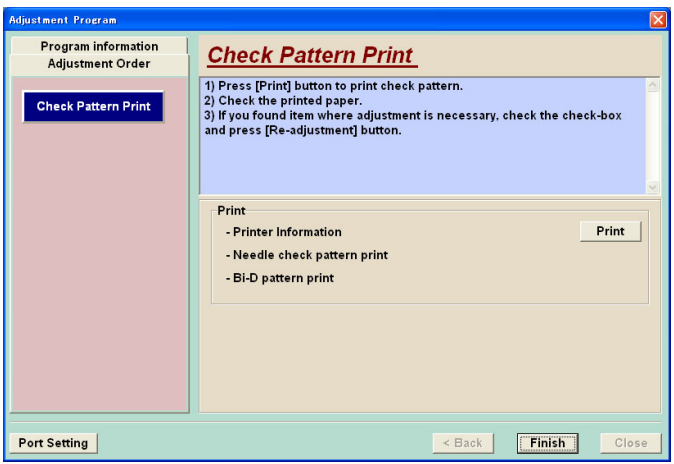

Firmware Update

Through this menu, the IPL (Initial Program Loader) and the firmware on the printer can be updated. Turn the printer ON, and transmit the IPL and firmware data files to the printer.

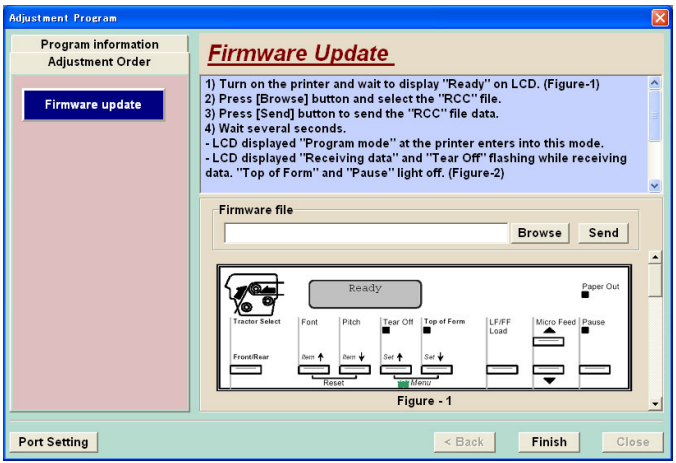

Printer Information

This menu item allows you to check the printer status information listed below:

- Total print line count
- Total power-on time
- Fatal error codes: The printer stores the most recent 8 error codes in chronological order.

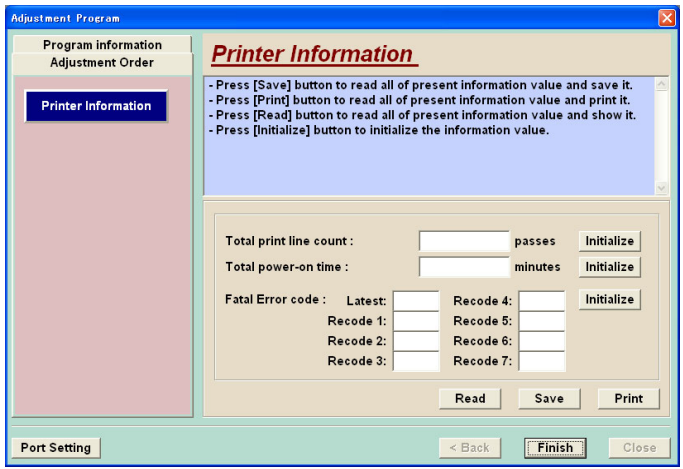

Custom Setting

By executing this function, you can set the following items individually.

Table 5-6. List of Custom Setting Items

Sub-number for customization	Page length for rear tractor
Top margin for rear tractor	Top margin for front tractor
Top margin minimum value	Bottom margin for rear tractor
Bottom margin for front tractor	ESC (command setting)
Auto tear off wait time	Energy save mode
Line spacing	Software
Pause Offline	Input buffer
ACK timing data	Black paper mode
Leveling curly paper for rear insertion	Leveling curly paper for front insertion
Centering paper feed	Paper width measure
Paper thickness measure position assign	Paper thickness measure horizontal position
Paper thickness measure vertical position	Base sheet PG position number
Label paper PG position number	Platen gap
Low-speed mode	

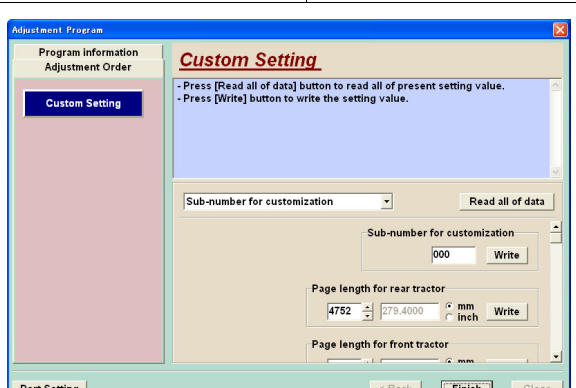

Troubleshooting fatal errors

This function checks the error codes of fatal errors stored in the EEPROM and provides an explanation of the error and the name of components to be verified or replaced.

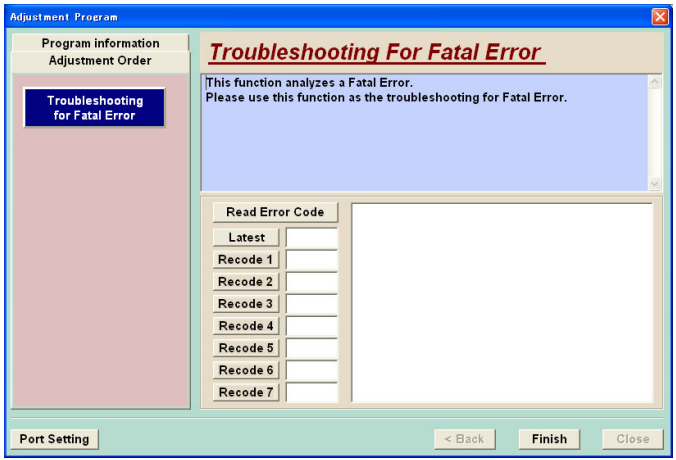

EEPROM data read/write

The contents (current values) of the EEPROM on the main board are checked or revised with this menu. In addition, all the EEPROM data can be stored as a file on the PC for further examination.

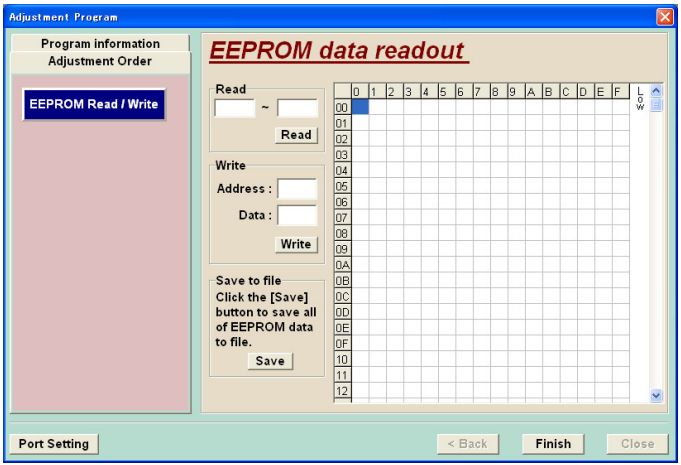

CHAPTER

6

MAINTENANCE

6.1 Overview

6.1.1 Preventive maintenance

Preventive maintenance is important to keep the printer in the best working condition and to help prevent premature failure.

Keep the printer as clean as possible. If necessary, use denatured alcohol to clean the exterior case. Use a vacuum cleaner to remove any dust and paper debris accumulated in the printer.

WARNING

- Before disassembling, assembling or adjusting the printer, disconnect the power supply cable from the AC power socket, and wait at least 5 minutes for capacitors to drain. Failure to do so might cause personal injury.
- Be careful with the Printhead when you handle it. It may be very hot immediately after printing.
- Do not touch the heat sink attached to the switching FETs (Q101, 102, 103, 301, 302, 303) on the power supply board immediately after power off. It may be very hot.

CAUTION

- Do not use paint thinner, trichloroethylene, or ketone-based solvents on the plastic components of the printer.
- Never use oil or grease other than those specified in this manual; use of other lubricants can damage the printer or its components.
- When using compressed air products; such as air duster, for cleaning during repair and maintenance, the use of such products containing flammable gas is prohibited.

6.2 Lubrication

6.2.1 Lubricants

The use of appropriate lubricants is critical to printer performance, especially in low temperatures. Epson has extensively tested and analyzed various types of oil and grease, and specifies the lubricants in the table below.

Table 6-1. Lubrication

Type	Name	Supplier	Part No.
Oil	O-31	Epson	1080618
	G-41	Epson	1017323
Grease	O-6	Epson	T.B.D.
	(FLOIL T-7)	Epson	T.B.D.

CAUTION

Lubricants must be applied during the reassembly process.

6.2.2 Lubrication points

Table 6-2. Lubrication point list

Lubrication Points		Reference Diagrams
Main unit	Shafts, bearings and OC cam	Figure 6-1
	Gears and slide cams	Figure 6-2
	Gears and tension pulley	Figure 6-3
	Carrier unit	Figure 6-4
	Washer contact surface of the SS gear	Figure 6-5
	Notch and pins on the Side Frames UL and UR	Figure 6-6
	Shaft bearings	Figure 6-7
	Gear bearings	Figure 6-8
	Ribbon drive	Figure 6-9
	Carrier oil pads	Figure 6-10
	Gear A and B shafts	Figure 6-11
	Nip bracket unit - gear shaft	Figure 6-12
	Tension Pulley bearing	Figure 6-13
	Rear tractor, left side	Figure 6-14
	Rear tractor, right side	Figure 6-15
	Bracket L ASY	Figure 6-16
	Bracket R ASY	Figure 6-17
	Upper Guide F ASY (1)	Figure 6-18
	Upper Guide F ASY (2)	Figure 6-19
	Upper Guide R ASY (1)	Figure 6-20

Table 6-2. Lubrication point list

Lubrication Points		Reference Diagrams
Main unit (cont.)	Upper Guide R ASY (2)	Figure 6-21
	Upper Guide R ASY (3)	Figure 6-22
Pull Tractor (Option)	Pull Tractor shaft bearings	Figure 6-23
	Gear shafts of the Pull Tractor lever (1)	Figure 6-24
	Pull Tractor lever (2)	Figure 6-25

6.2.2.1 Main unit

Shafts, bearings and OC cam

Lubrication Points	Oil Type	Amount	Remarks
(1) Center bore surfaces and shaft of the Bearing FL/FR	G-31	Apply a light coating of lubricant to the surfaces	Apply to the same parts on Side Frame R
(2) Center bore and shaft of the Bearing RL/RR	G-31	Apply a light coating of lubricant to the surfaces	Apply to the same parts on Side Frame R
(3) Center bore of the OC bearings L/R and the OC shaft	G-31	Apply a light coating of lubricant to the surfaces	Apply to the same parts on Side Frame R
(4) Center bore of the collar and Nip roller shaft R	G-31	Apply a light coating of lubricant to the surfaces	Apply to the same parts on Side Frame R
(5) Cam and center bore of the OC cam	G-31	Apply a light coating of lubricant to the surfaces	Apply to the same parts on Side Frame R

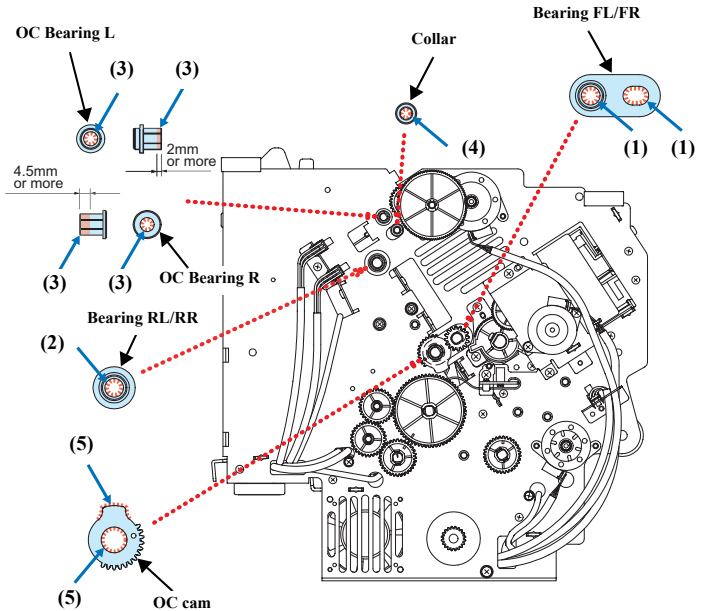

Figure 6-1. Lubrication Point 1

Gears and slide cams

Lubrication Points	Oil Type	Amount	Remarks
(1) Center Bore of the Shift gear, the spring, and the teeth and side surfaces of the Shift gear	G-31	Apply a light coating of lubricant to the surfaces	
(2) Center bore of the HCPP slide cam on the Side Frame Left, Shift gear, and the shaft	G-31	Apply a light coating of lubricant to the surfaces	Slide cam
(3) Center bore of the OC slide cam, the bearings, and the collar	G-31	Apply a light coating of lubricant to the surfaces	Apply to the same parts on Side Frame R
(4) Center bore of the Shift gear, and the shaft	G-31	Apply a light coating of lubricant to the surfaces	

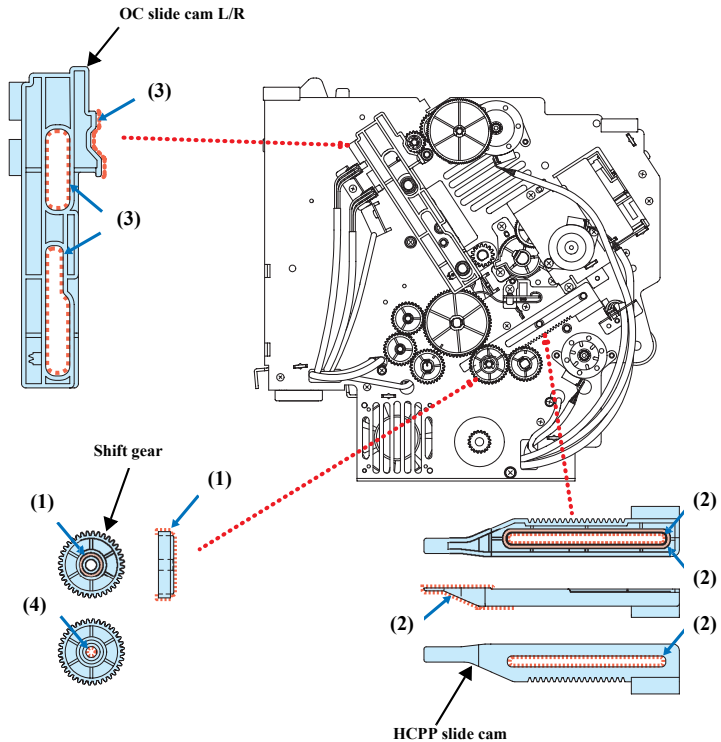

Figure 6-2. Lubrication Point 2

Gears and tension pulley

Lubrication Points	Oil Type	Amount	Remarks
(1) Center bores and shafts of the gears as illustrated	G-31	Apply a light coating of lubricant to the surfaces	4 places
(2) Center bore and shaft of the Tension pulley	G-31	Apply a light coating of lubricant to the surfaces	

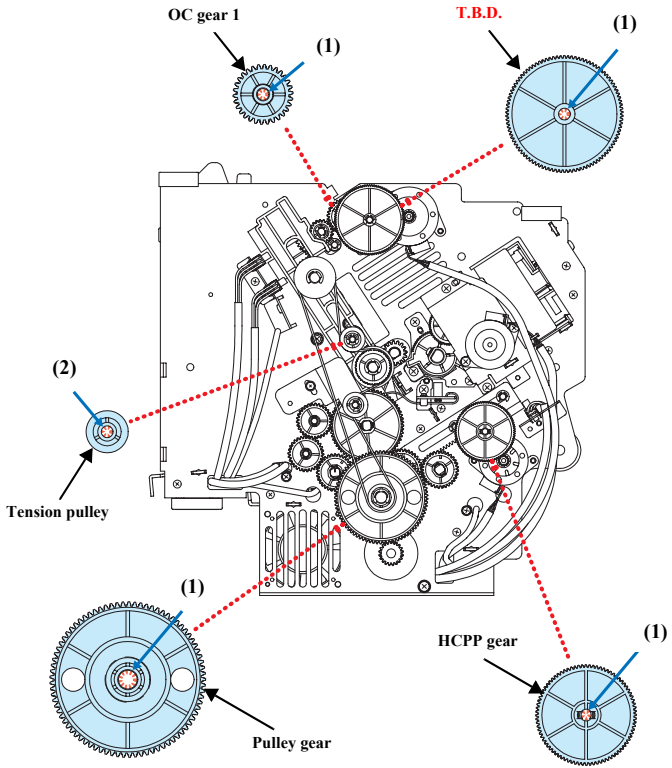

Figure 6-3. Lubrication Point 3

Carrier unit

Lubrication Points	Oil Type	Amount	Remarks
(1) Both sides of the Upper Angle	See Note below.	Apply a light coating of lubricant to the surfaces	

CHECK POINT

Lubricate the Upper Angle with a 2:1 mixture (by weight) of G-41 and O-6.

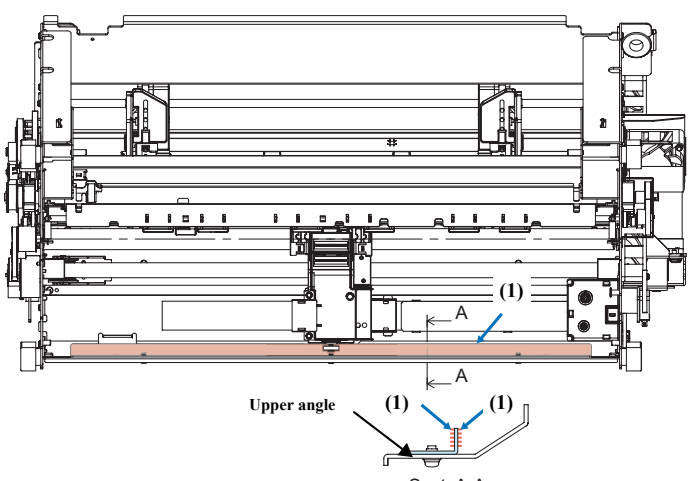

Figure 6-4. Lubrication Point 4

Washer contact surface of the SS gear

Lubrication Points	Oil Type	Amount	Remarks
(1) Contact surfaces of the SS gear and the SS washer	G-31	Apply a thick layer (0.1 to 0.2 mm) of lubricant to the surfaces	

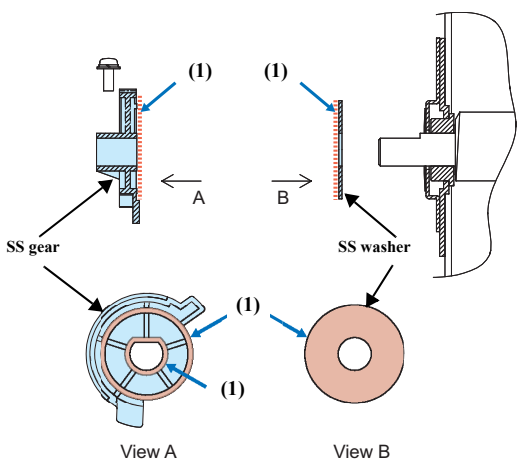

Figure 6-5. Lubrication Point 5

Notch and pins on the Side Frames UL and UR

Lubrication Points	Oil Type	Amount	Remarks
(1) Notch in the Side Frames UL and UR	G-31	Apply a light coating of lubricant to the surfaces	Left and right Side Frames
(2) Pins on the Side frames UL and UR	G-31	Apply a light coating of lubricant to the surfaces	Left and right Side Frames

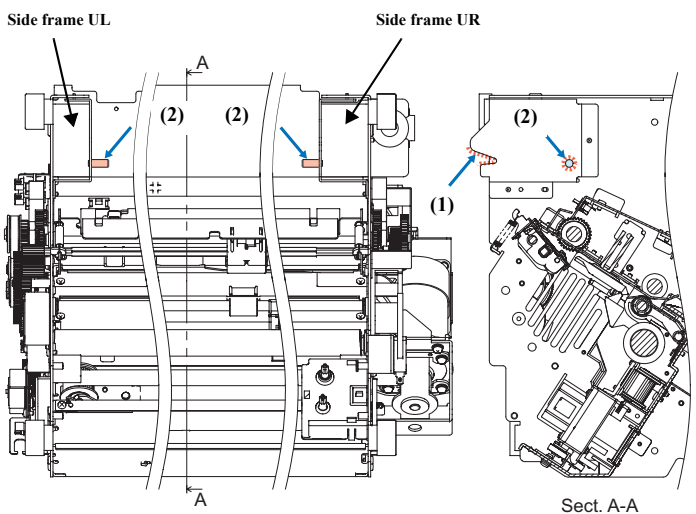

Figure 6-6. Lubrication Point 6

Shaft bearings

Lubrication Points	Oil Type	Amount	Remarks
(1) Center bores of the bearings for the Tractor shafts	G-31	Apply a light coating of lubricant to the surfaces	There are 6 locations: 3 on the left side of the main unit, and 3 on the right side.

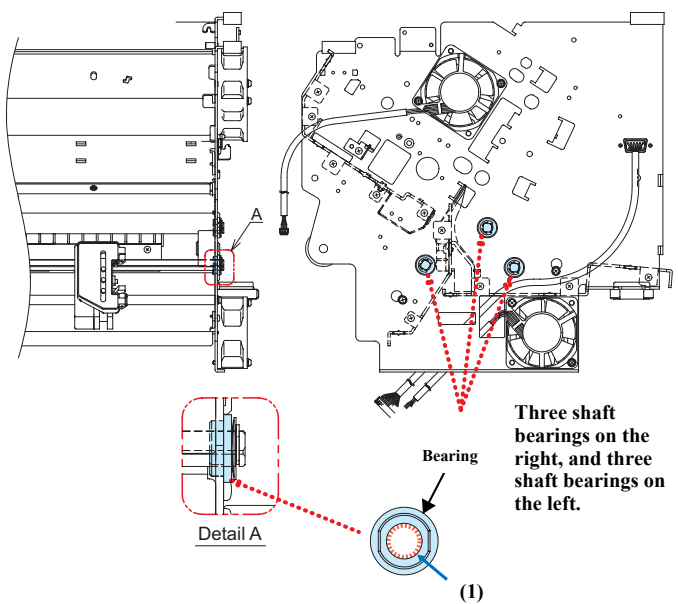

Figure 6-7. Lubrication Point 7

Gear bearings

Lubrication Points	Oil Type	Amount	Remarks
(1) Center bore of the two RTR intermediate gears	G-31	Apply a light coating of lubricant to the surfaces	2 places (one each gear), as illustrated
(2) Teeth and outer side surfaces of TR Gear 1 and TR Gear 2	G-31	Apply a light coating of lubricant to the surfaces	Apply to the entire perimeter of each gear

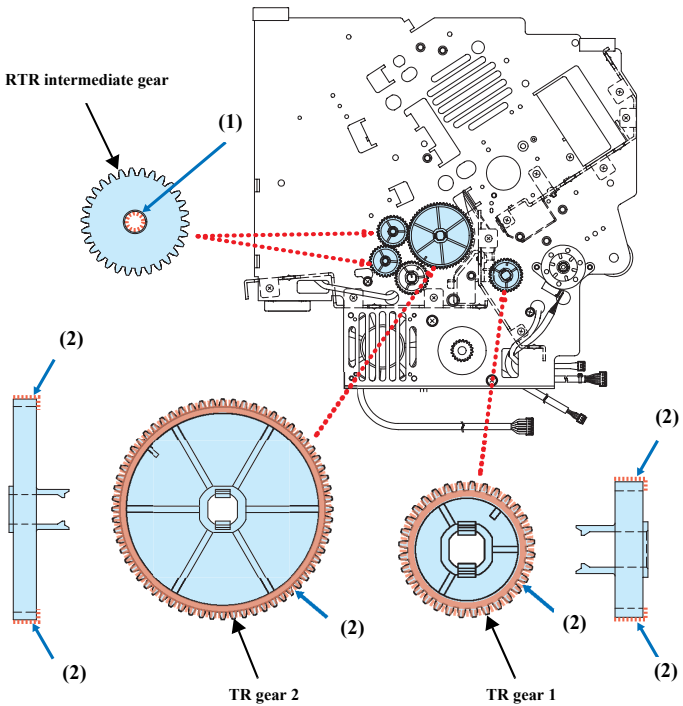

Figure 6-8. Lubrication Point 8

Ribbon drive

Lubrication Points	Oil Type	Amount	Remarks
(1) Center bore of the RF gear, and the RF cover	G-31	Apply a light coating of lubricant to the surfaces	
(2) Center bore of the RF gear and the bushing	G-31	Apply a light coating of lubricant to the surfaces	
(3) Center bore and shaft of the gear, as shown	G-31	Apply a light coating of lubricant to the surfaces	
(4) The RF shaft	G-31	Apply a light coating of lubricant to the surfaces	
(5) The RF shaft and the RF cover	G-31	Apply a light coating of lubricant to the surfaces	

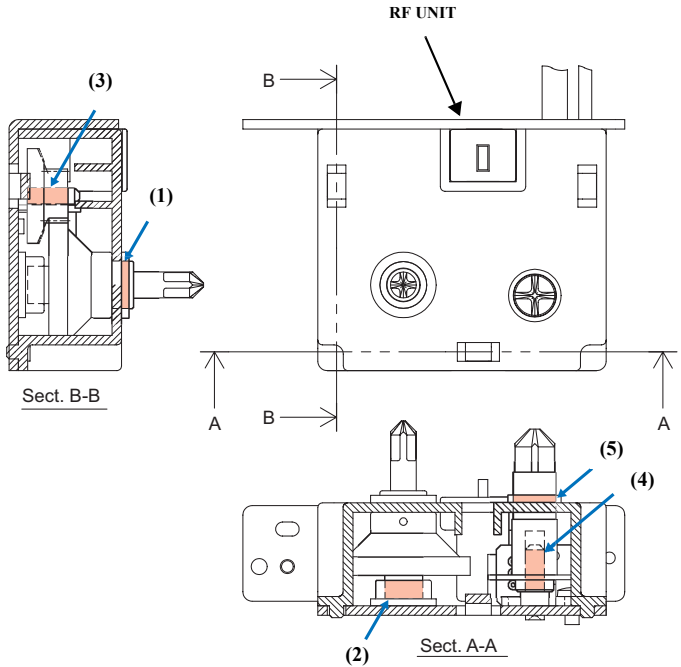

Figure 6-9. Lubrication Point 9

Carrier oil pads

Lubrication Points	Oil Type	Amount	Remarks
(1) Carrier (CR) felt oil pads	(FLOIL T-7)	Apply 0.25 cc to the felt oil pad.	
(2) Felt oil pads	(FLOIL T-7)	Apply 2.0 cc to the oil pad.	

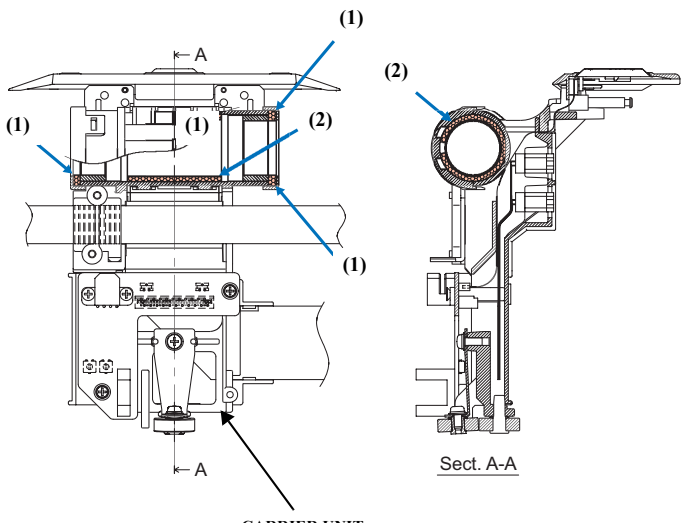

Figure 6-10. Lubrication Point 10

Gear A and B shafts

Lubrication Points	Oil Type	Amount	Remarks
(1) Center bores and shafts of Gear A and Gear B	G-31	Apply a light coating of lubricant to the surfaces	

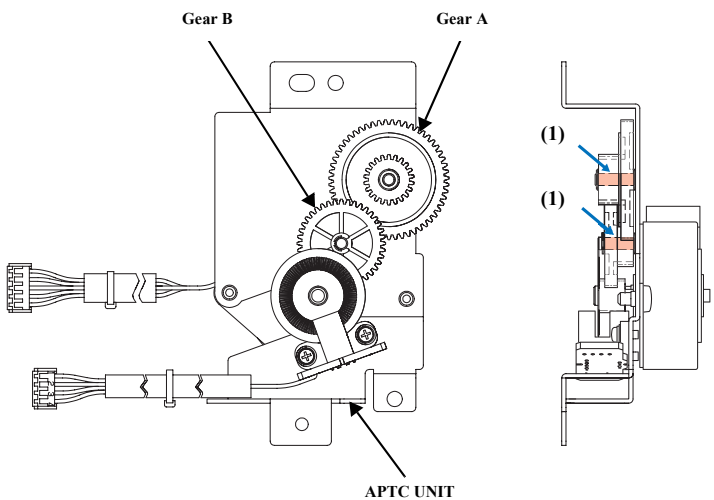

Figure 6-11. Lubrication Point 11

Nip bracket unit - gear shaft

Lubrication Points	Oil Type	Amount	Remarks
(1) Center bore and shaft of the compound gear on the Nip Bracket unit	G-31	Apply a light coating of lubricant to the surfaces	

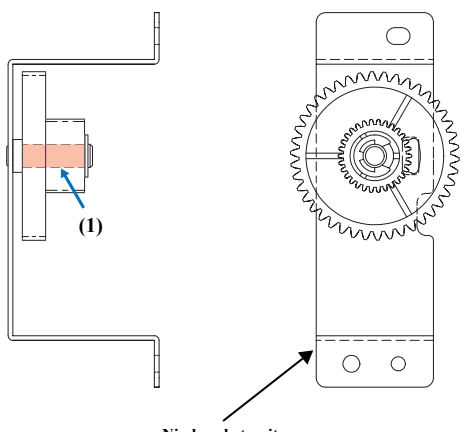

Figure 6-12. Lubrication Point 12

Tension Pulley bearing

Lubrication Points	Oil Type	Amount	Remarks
(1) Shaft of the Tension pulley	G-31	Apply a light coating of lubricant to the surfaces	

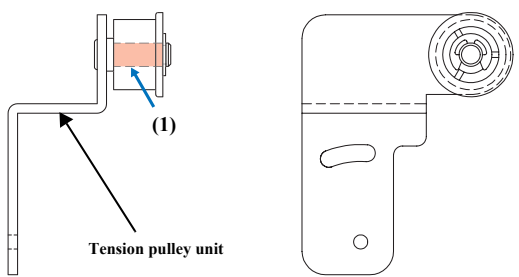

Figure 6-13. Lubrication Point 13

Rear tractor, left side

Lubrication Points	Oil Type	Amount	Remarks
(1) Inside surface of the bushing on the R (Rear) Tractor Shaft	G-31	Apply a light coating of lubricant to the surfaces	The bushing is on the TRACTOR RL (Rear Left) UNIT
(2) Sliding surfaces on the TRACTOR RL UNIT: Both inner and outer sides around the bushing where the spring washer contacts the R tractor	G-31	Apply a light coating of lubricant to the surfaces	Both sides of the TRACTOR RL (Rear, Left) UNIT

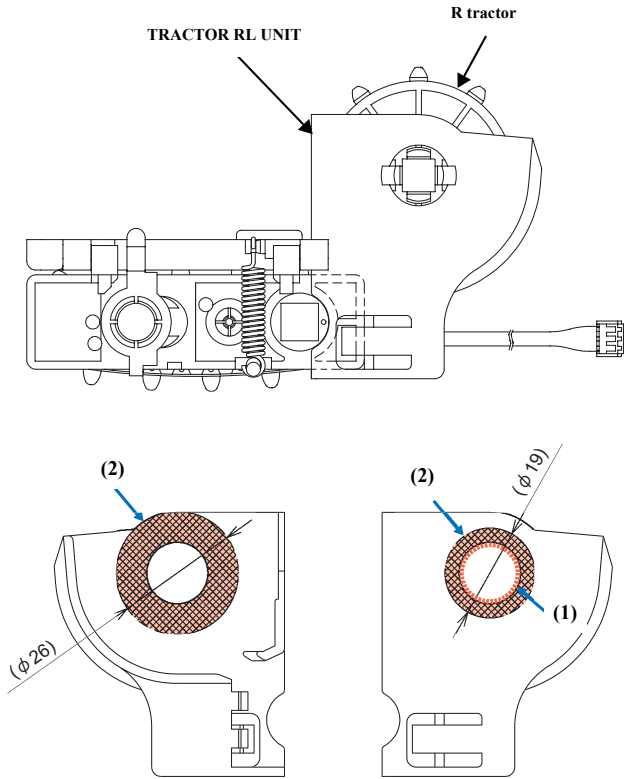

Figure 6-14. Lubrication Point 14

Rear tractor, right side

Lubrication Points	Oil Type	Amount	Remarks
(1) Inside surface of the bushing on the R (Rear) tractor shaft	G-31	Apply a light coating of lubricant to the surfaces	The bushing is on the TRACTOR RR (Rear, Right) UNIT
(2) Sliding surfaces on the TRACTOR RR UNIT: Both inner and outer sides around the bushing where the spring washer contacts the R tractor	G-31	Apply a light coating of lubricant to the surfaces	Both sides of the TRACTOR RR (Rear, Right) UNIT

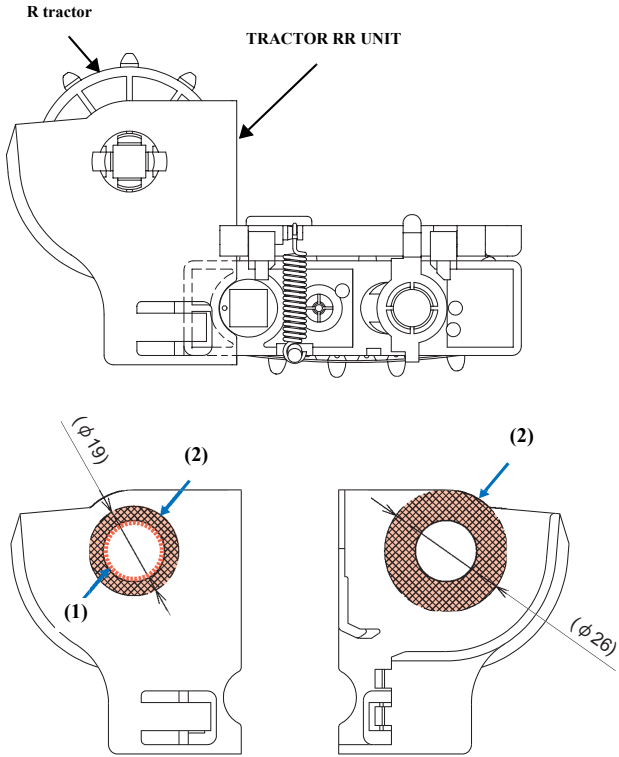

Figure 6-15. Lubrication Point 15

Bracket L ASY

Lubrication Points	Oil Type	Amount	Remarks
(1) Sliding surfaces of the Spring L and Plate L	G-31	Apply a light coating of lubricant to the surfaces	2 places
(2) Sliding surfaces of the Spring L and Bracket L	G-31	Apply a light coating of lubricant to the surfaces	2 places
(3) Sliding surfaces of the shaft and the Bracket L	G-31	Apply a light coating of lubricant to the surfaces	1 place
(4) Sliding surfaces of the E-ring and the Bracket L	G-31	Apply a light coating of lubricant to the surfaces	1 place
(5) Sliding contact surfaces of the spacer and Plate L Sliding surfaces of the spacer and Bracket L	G-31	Apply a light coating of lubricant to the surfaces	1 place on each
(6) Sliding surfaces and shaft of Spring L	G-31	Apply a light coating of lubricant to the surfaces	Entire area on the inner side of Spring L

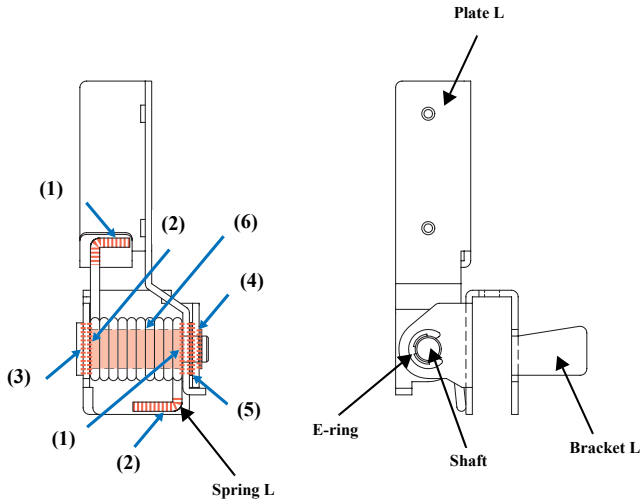

Figure 6-16. Lubrication Point 16

Bracket R ASY

Lubrication Points	Oil Type	Amount	Remarks
(1) Sliding surfaces of Spring R and Plate R	G-31	Apply a light coating of lubricant to the surfaces	2 places
(2) Sliding surfaces of Spring R and Bracket R	G-31	Apply a light coating of lubricant to the surfaces	2 places
(3) Sliding surfaces of the shaft and Bracket R	G-31	Apply a light coating of lubricant to the surfaces	1 place
(4) Sliding surfaces of the E-ring and Bracket R	G-31	Apply a light coating of lubricant to the surfaces	1 place
(5) Sliding surfaces of the spacer and Plate R Sliding surfaces of the spacer and Bracket R	G-31	Apply a light coating of lubricant to the surfaces	1 place on each
(6) Sliding surfaces and shaft of Spring R	G-31	Apply a light coating of lubricant to the surfaces	Entire area on the inner side of Spring R

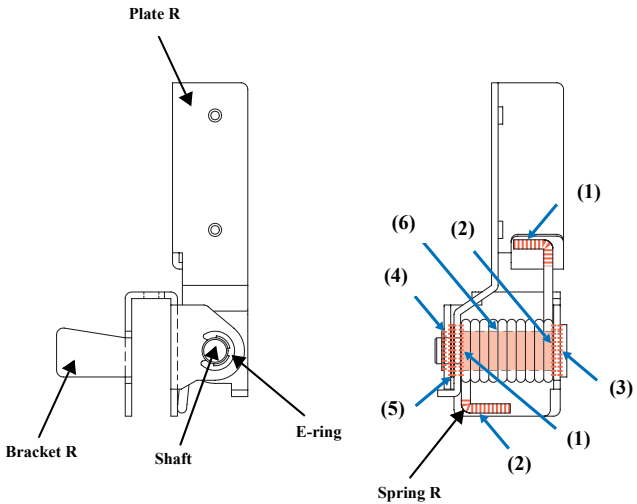

Figure 6-17. Lubrication Point 17

Upper Guide F ASY (1)

Lubrication Points	Oil Type	Amount	Remarks
(1) Sliding surfaces of Nip Spring Holder F and the Nip Roller Shaft	G-31	Apply a light coating of lubricant to the surfaces	3 places on the inside of Nip Spring Holder F

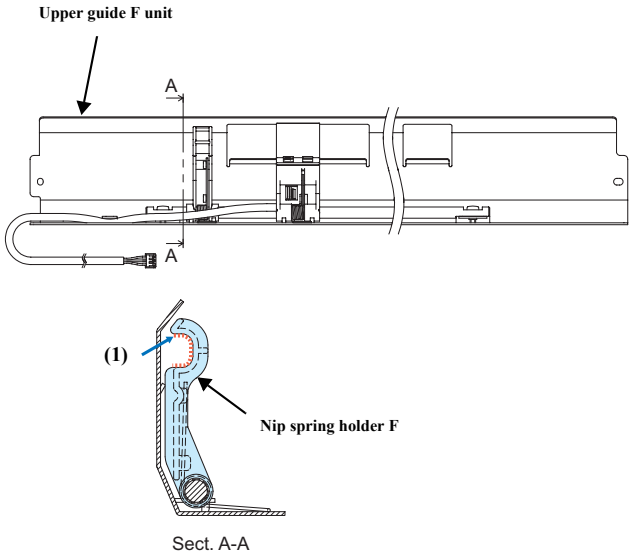

Figure 6-18. Lubrication Point 18

Upper Guide F ASY (2)

Lubrication Points	Oil Type	Amount	Remarks
(1) Inside contact surfaces of Nip Spring F and Nip Shaft F	G-31	Apply a light coating of lubricant to the surfaces	3 places on the inside of Nip spring F
(2) Inside contact surfaces of the PJS Spring and Nip Shaft F	G-31	Apply a light coating of lubricant to the surfaces	3 places on the inside of the PJS spring

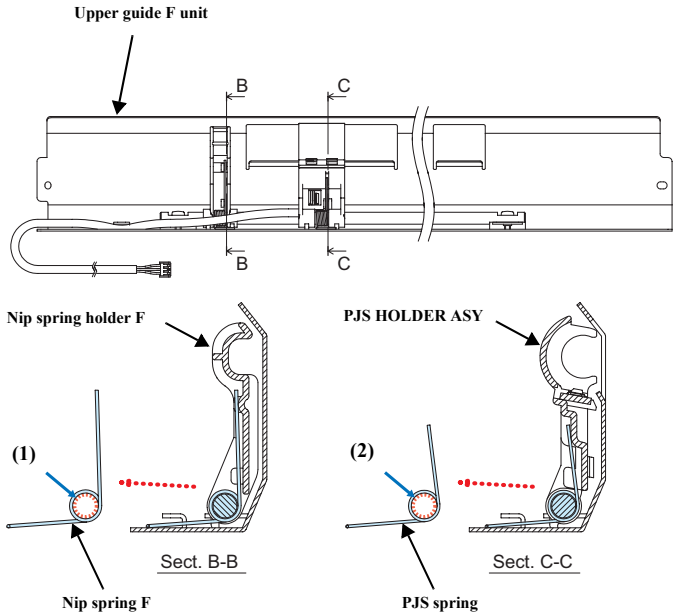

Figure 6-19. Lubrication Point 19

Upper Guide R ASY (1)

Lubrication Points	Oil Type	Amount	Remarks
(1) Inside the center bore of the bushings for Nip Roller Shaft R	G-31	Apply a light coating of lubricant to the surfaces	All around the inside of the left and right bushings
(2) Inside surfaces of the bushings for Nip Roller R	G-31	Apply a light coating of lubricant to the surfaces	Inside of the 2 bushings on the left and right Nip holder Rs (6 places in total)
(3) The OC shaft and Nip Holder R	G-31	Apply a light coating of lubricant to the surfaces	Inside of the 2 bushings on the left and right Nip holder Rs (6 places in total)

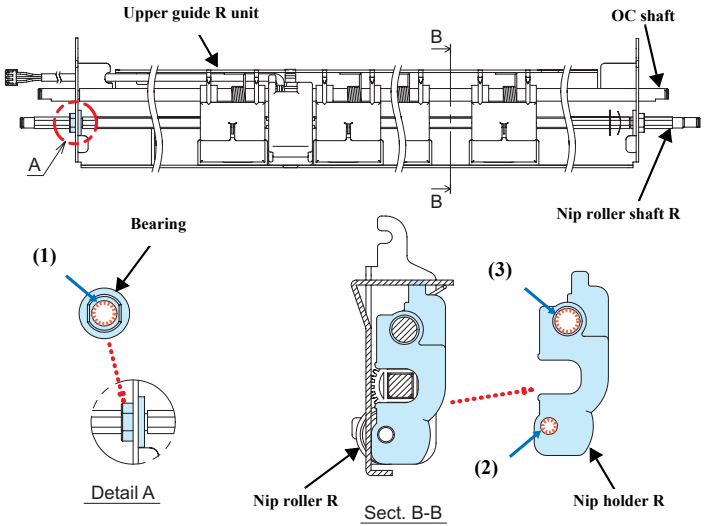

Figure 6-20. Lubrication Point 20

Upper Guide R ASY (2)

Lubrication Points	Oil Type	Amount	Remarks
(1) Center bore of the bushing for the OC shaft	G-31	Apply a light coating of lubricant to the surfaces	All around the inside of the left and right bushings
(2) Center bore of the bearing for Nip Roller Shaft R	G-31	Apply a light coating of lubricant to the surfaces	Notch in the shaft holder
(3) Center bore of the bushing for Nip Roller Shaft R	G-31	Apply a light coating of lubricant to the surfaces	All around the inside of the left and right bushings

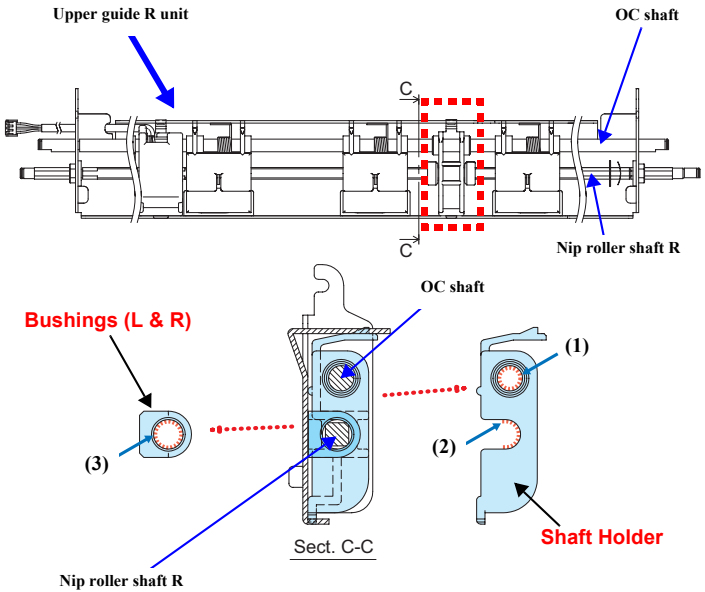

Figure 6-21. Lubrication Point 21

Upper Guide R ASY (3)

Lubrication Points	Oil Type	Amount	Remarks
(1) OC shaft and the inside of Nip Spring R	G-31	Apply a light coating of lubricant to the surfaces	All around the inside of Nip Spring R (6 places in total)

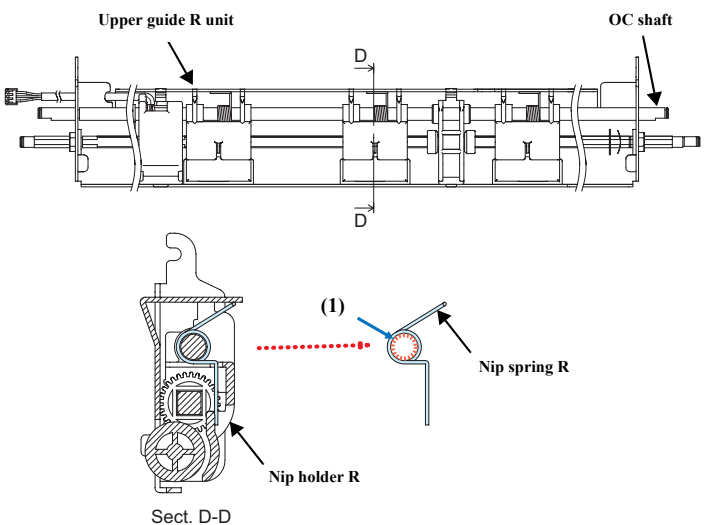

Figure 6-22. Lubrication Point 22

6.2.2.2 Pull tractor unit (option)

Pull Tractor shaft bearings

Lubrication Points	Oil Type	Amount	Remarks
(1) Center bore of the bushings for the Tractor shaft	G-31	Apply a light coating of lubricant to the surfaces	All around the inside of the left and right bushings

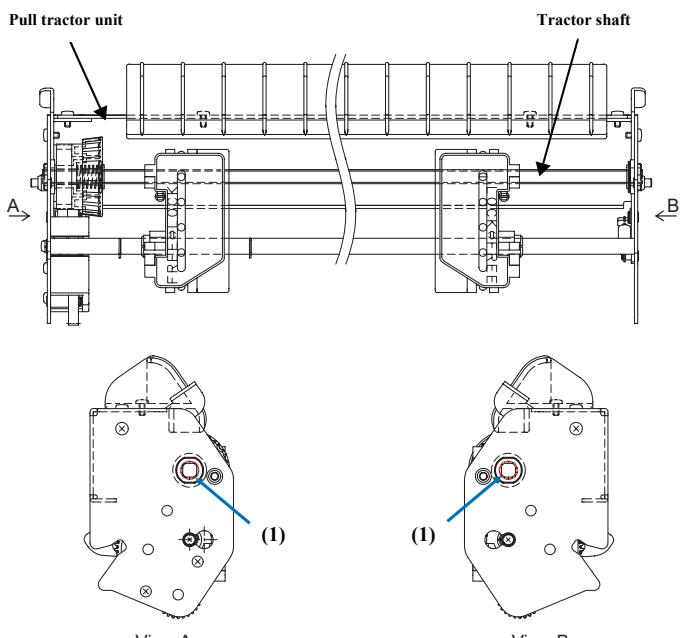

Figure 6-23. Lubrication Point 23

Gear shafts of the Pull Tractor lever (1)

Lubrication Points	Oil Type	Amount	Remarks
(1) Center bores and shafts for the Pull Tractor gears, as indicated below	G-31	Apply a light coating of lubricant to the surfaces	3 places

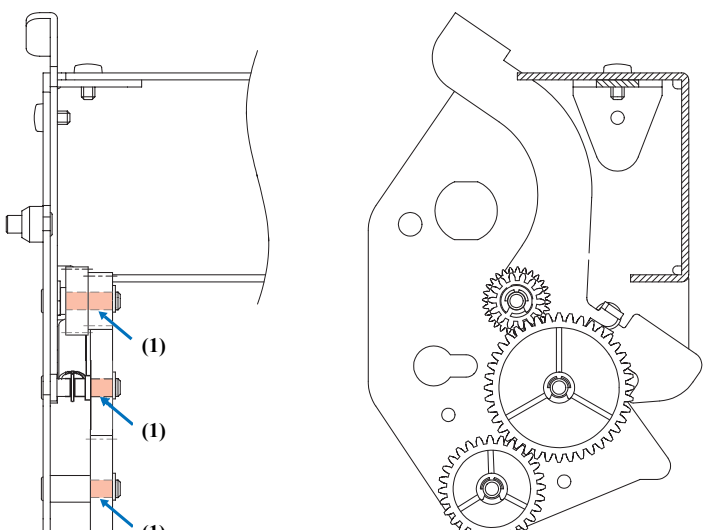

Figure 6-24. Lubrication Point 24

Pull Tractor lever (2)

Lubrication Points	Oil Type	Amount	Remarks
(1) Pull Tractor lever hinge hole and shaft	G-31	Apply a light coating of lubricant to the surfaces	2 places, one on each side of the Pull Tractor Lever

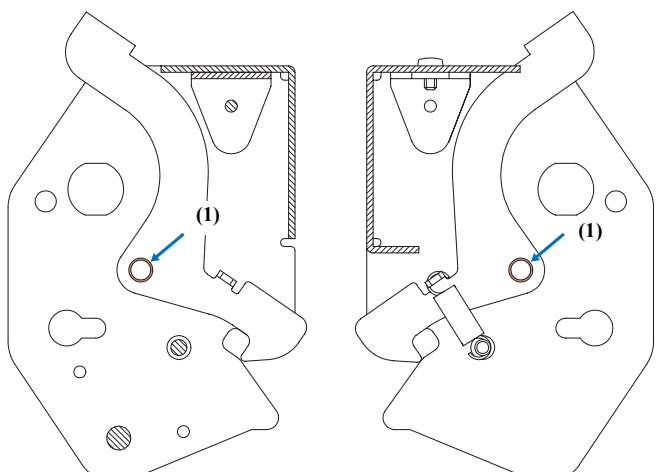

Figure 6-25. Lubrication Point 25

CHAPTER

7

APPENDIX

7.1 System connection diagram

The primary components of the printer are connected as shown below.

Table 7-1. Connector summary

Board	Connector No.	Pin	Description
ROM BOARD (WD04A*)	CN1284	38	Parallel I/F
	CNRS232C	25	Serial I/F
	CNUSB	6	USB I/F
	CNTYPEB	36	Type-B I/F
	CNSEN1	28	SENSOR BOARD UNIT
	CNSEN2	26	SENSOR BOARD UNIT
	CNOP	10	Control Panel
	CNPW	8	POWER UNIT (+42 V/+37 V)
	CNLOGPW	4	POWER UNIT (+5 V)
	CNSPHS	7	SP MOTOR hole IC
	CNSPM	3	SP MOTOR
	CNINLK	4	INLK SW
	CNFHD1 CNFHD2 CNRHD1 CNRHD2	22 22 22 22	Carrier PCB (Front PRINT HEAD L, R) (Rear PRINT HEAD L, R)
	CNHD3	22	Carrier PCB (Sensor)
	CNLF	6	LF MOTOR
POWER UNIT (KA0040)	ACIN	3	AC SW/INLET SW
	CNPW	12	ROM BOARD
Control Panel (WDP04A*)	CNOP	10	ROM BOARD

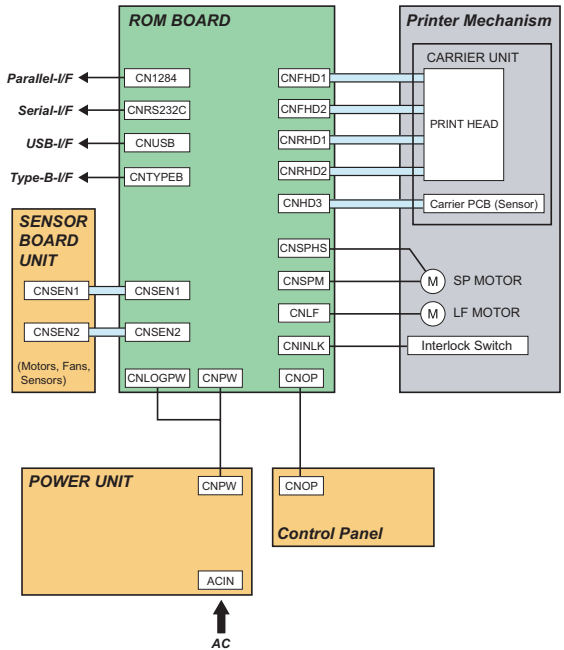

Figure 7-1. Cable Connections

7.2 Electrical system connections

7.2.1 Connector summary

Parallel I/F (CN1284)
Refer to Parallel interface (forward channel) (p. 24).

Serial I/F (CNRS232C)
Refer to Serial interface (p. 29).

USB I/F (CNUSB)
Refer to USB Interface (p. 30).

Type-B I/F (CNTYPEB)
Refer to Optional interfaces (p. 32).

7.2.1.1 Sensor board unit (CNSEN1)

Table 7-2. CNSEN1 Connector pin assignment

Pin No.	I/O	Signal Name	Function
1	–	SG1	Ground
2	I	FTRPES	Front Tractor PE Sensor signal
3	I	RTRPES	Rear Tractor PE Sensor signal
4	I	PPSS	HCPP sensor signal
5	–	SG1	Ground
6	I	OCS1	OC sensor 1 signal
7	I	OCS2	OC sensor 2 signal
8	O	PHASE_P	Perforation cutter unit drive signal
9	O	ENABLE_N	Perforation cutter unit enable signal
10	I	PCIS	Perforation cutter Install Sensor signal
11	I	PCHPS	Perforation cutter HP sensor signal

Table 7-2. CNSEN1 Connector pin assignment (continued)

Pin No.	I/O	Signal Name	Function
12	I	PCRPS	Perforation cutter Reverse Position sensor signal
13	–	+5 V	+5 V
14	O	TPE_ON	T.B.D.
15	I	COS	Cover Open sensor signal
16	I	PJS	PJ sensor signal
17	I	TPE	TPE sensor signal
18	I	APTCS1	APTC encoder1 signal
19	I	APTCS2	APTC encoder2 signal
20	I	APTCHP	APTC HP sensor signal
21	I	RFS	RF sensor signal
22	I	RMS	RM switch signal
23	I	PTRM	PRTM sensor signal
24	I	FANALM1	FAN1 alarm signal
25	I	FANALM2	FAN2 alarm signal
26	I	FANALM3	FAN3 alarm signal
27	I	FANALM4	FAN4 alarm signal
28	–	SG1	Ground

7.2.1.2 Sensor board unit (CNSEN2)

Table 7-3. CNSEN2 Connector pin assignment

Pin No.	I/O	Signal Name	Function
1	–	OCCOM	OC Motor common voltage (+42 V)
2	O	OCDVA	OC Motor drive signal (A)
3	O	OCDVB	OC Motor drive signal (B)
4	O	OCDVC	OC Motor drive signal (C)
5	O	OCDVD	OC Motor drive signal (D)
6	–	HCPPCOM	HCPP Motor common voltage (+42 V)
7	O	HCPPDVA	HCPP Motor drive signal (A)
8	O	HCPPDVB	HCPP Motor drive signal (B)
9	O	HCPPDVC	HCPP Motor drive signal (C)
10	O	HCPPDVD	HCPP Motor drive signal (D)
11	–	SG3	Ground
12	O	RBDVA	Ribbon Feed Motor drive signal (A)
13	O	RBDVB	Ribbon Feed Motor drive signal (B)
14	O	RBDVC	Ribbon Feed Motor drive signal (C)
15	O	RBDVD	Ribbon Feed Motor drive signal (D)
16	–	APTCCOM	APTC Motor common voltage (+42 V)
17	O	APTCDVA	APTC Motor drive signal (A)
18	O	APTCDVB	APTC Motor drive signal (B)
19	O	APTCDVC	APTC Motor drive signal (C)
20	O	APTCDVD	APTC Motor drive signal (D)
21	–	PCCOM	Perforation cutter common voltage (+37 V)
22	–	SG2	Ground
23	O	FAND1	FAN1 and FAN2 Motor drive voltage (+42 V)

Table 7-3. CNSEN2 Connector pin assignment (continued)

Pin No.	I/O	Signal Name	Function
24	–	SG3	Ground
25	O	FAND2	FAN3 and FAN4 Motor drive voltage (+42 V)
26	–	SG3	Ground

7.2.1.3 Control panel (CNOP)

Table 7-4. CNOP Connector pin assignment

Pin No.	I/O	Signal Name	Function
1	O	OP_CLK	LCD Clock signal
2	O	OP_XRST	Reset siganl
3	–	SG1	Ground
4	–	+5 V	+5 V
5	I	OP_SDIN	Serial Data In signal
6	O	OP_LOAD	Load siganl
7	–	–	Not used
8	O	OP_SHIFT	Shift signal
9	O	OP_DOT	Data Out signal
10	–	SG1	Ground

7.2.1.4 Power unit (CNPW)

Table 7-5. CNPW Connector pin assignment

Pin No.	I/O	Signal Name	Function
1	–	+37 V	+37 V
2	–	+42 V	+42 V
3	–	+42 V	+42 V
4	–	SG3	Ground
5	–	SG2	Ground
6	–	+42 V	+42 V
7	–	SG3	Ground
8	–	SG3	Ground

7.2.1.5 Power unit (CNLOGPW)

Table 7-6. CNLOGPW Connector pin assignment

Pin No.	I/O	Signal Name	Function
1	–	SG1	Ground
2	O	XPST42 V	+42 V ON/OFF Control signal
3	O	XPST37 V	+37 V ON/OFF Control signal
4	–	+5 V	+5 V

7.2.1.6 SP motor Hall IC (CNSPHS)

Table 7-7. CNSPHS Connector pin assignment

Pin No.	I/O	Signal Name	Function
1	–	+5 V	+5 V
2	–	SG1	Ground
3	I	CR_C3	SP Motor drive signal (C3)
4	I	CR_C2	SP Motor drive signal (C2)
5	I	CR_C1	SP Motor drive signal (C1)
6	–	+5 V	+5 V
7	I	CRTHSN	CR thermistor signal

7.2.1.7 SP motor (CNSPM)

Table 7-8. CNSPM Connector pin assignment

Pin No.	I/O	Signal Name	Function
1	O	CR_W	SP Motor drive signal (W)
2	O	CR_V	SP Motor drive signal (V)
3	O	CR_U	SP Motor drive signal (U)

7.2.1.8 Interlock switch (CNINLK)

Table 7-9. CNINLK Connector pin assignment

Pin No.	I/O	Signal Name	Function
1	I	INLKIN	Inter Lock switch signal
2	–	–	Not used
3	–	–	Not used
4	–	+42 V	+42 V

7.2.1.9 Printhead (CNFHD1)

Table 7-10. CNFHD1 Connector pin assignment

Pin No.	I/O	Signal Name	Function
1	I	THSN1	Thermistor1 signal
2	O	FR7DV	Front Right 7 Print Head drive signal
3	O	FR5DV	Front Right 5 Print Head drive signal
4	O	FR3DV	Front Right 3 Print Head drive signal
5	O	FR1DV	Front Right 1 Print Head drive signal
6	O	FR9DV	Front Right 9 Print Head drive signal
7	–	+42 V	+42 V
8	–	+42 V	+42 V
9	–	+42 V	+42 V
10	–	+42 V	+42 V
11	–	–	Not used
12	–	–	Not used
13	–	+42 V	+42 V
14	–	+42 V	+42 V
15	–	+42 V	+42 V
16	–	+42 V	+42 V
17	–	+42 V	+42 V
18	O	FL2DV	Front Left 2 Print Head drive signal
19	O	FL4DV	Front Left 4 Print Head drive signal
20	O	FL6DV	Front Left 6 Print Head drive signal
21	O	FL8DV	Front Left 8 Print Head drive signal
22	–	–	Not used

7.2.1.10 Printhead (CNFHD2)

Table 7-11. CNFHD2 Connector pin assignment

Pin No.	I/O	Signal Name	Function
1	–	–	Not used
2	O	FL7DV	Front Left 7 Print Head drive signal
3	O	FL5DV	Front Left 5 Print Head drive signal
4	O	FL3DV	Front Left 3 Print Head drive signal
5	O	FL1DV	Front Left 1 Print Head drive signal
6	O	FL9DV	Front Left 9 Print Head drive signal
7	–	+42 V	+42 V
8	–	+42 V	+42 V
9	–	+42 V	+42 V
10	–	+42 V	+42 V
11	–	–	Not used
12	–	–	Not used
13	–	+42 V	+42 V
14	–	+42 V	+42 V
15	–	+42 V	+42 V
16	–	+42 V	+42 V
17	–	+42 V	+42 V
18	O	FR8DV	Front Right 8 Print Head drive signal
19	O	FR2DV	Front Right 2 Print Head drive signal
20	O	FR4DV	Front Right 4 Print Head drive signal
21	O	FR6DV	Front Right 6 Print Head drive signal
22	–	SG1	Ground

7.2.1.11 Printhead (CNRHD1)

Table 7-12. CNRHD1 Connector pin assignment

Pin No.	I/O	Signal Name	Function
1	–	–	Not used
2	O	RR7DV	Rear Right 8 Print Head drive signal
3	O	RR5DV	Rear Right 5 Print Head drive signal
4	O	RR3DV	Rear Right 3 Print Head drive signal
5	O	RR1DV	Rear Right 1 Print Head drive signal
6	O	RR9DV	Rear Right 9 Print Head drive signal
7	–	+42 V	+42 V
8	–	+42 V	+42 V
9	–	+42 V	+42 V
10	–	+42 V	+42 V
11	–	–	Not used
12	–	–	Not used
13	–	+42 V	+42 V
14	–	+42 V	+42 V
15	–	+42 V	+42 V
16	–	+42 V	+42 V
17	–	+42 V	+42 V
18	O	RL2DV	Rear Left 2 Print Head drive signal
19	O	RL4DV	Rear Left 4 Print Head drive signal
20	O	RL6DV	Rear Left 6 Print Head drive signal
21	O	RL8DV	Rear Left 8 Print Head drive signal
22	–	SG1	Ground

7.2.1.12 Printhead (CNRHD2)

Table 7-13. CNRHD2 Connector pin assignment

Pin No.	I/O	Signal Name	Function
1	I	THSN2	Thermistor2 signal
2	O	RL7DV	Rear Left 7 Print Head drive signal
3	O	RL5DV	Rear Left 5 Print Head drive signal
4	O	RL3DV	Rear Left 3 Print Head drive signal
5	O	RL1DV	Rear Left 1 Print Head drive signal
6	O	RL9DV	Rear Left 9 Print Head drive signal
7	–	+42 V	+42 V
8	–	+42 V	+42 V
9	–	+42 V	+42 V
10	–	+42 V	+42 V
11	–	–	Not used
12	–	–	Not used
13	–	+42 V	+42 V
14	–	+42 V	+42 V
15	–	+42 V	+42 V
16	–	+42 V	+42 V
17	–	+42 V	+42 V
18	O	RR8DV	Rear Right 8 Print Head drive signal
19	O	RR2DV	Rear Right 2 Print Head drive signal
20	O	RR4DV	Rear Right 4 Print Head drive signal
21	O	RR6DV	Rear Right 6 Print Head drive signal
22	–	–	Not used

7.2.1.13 Printhead (CNHD3)

Table 7-14. CNHD3 Connector pin assignment

Pin No.	I/O	Signal Name	Function
1	–	SG1	Ground
2	O	TOF_ON	TOF sensor ON signal
3	–	SG1	Ground
4	–	+5 V	+5 V
5	–	SG1	Ground
6	I	TOFRS	TOF Right sensor signal
7	–	SG1	Ground
8	I	CES2-AX	CES2-AX signal (-)
9	–	SG1	Ground
10	I	CES2-A	CES2-A signal (+)
11	–	SG1	Ground
12	I	LES	Left End Sensor signal
13	–	SG1	Ground
14	I	CES1-A	CES1-A signal (+)
15	–	SG1	Ground
16	I	CES1-AX	CES1-AX signal (-)
17	–	SG1	Ground
18	I	TOFLS	TOF Left sensor signal
19	–	SG1	Ground
20	–	+5 V	+5 V
21	–	SG1	Ground
22	O	TOF_ON	TOF sensor ON signal

7.2.1.14 LF motor (CNLF)

Table 7-15. CNLF Connector pin assignment

Pin No.	I/O	Signal Name	Function
1	O	LFDVA	LF Motor drive signal (A)
2	O	LFDVB	LF Motor drive signal (B)
3	O	LFDVC	LF Motor drive signal (C)
4	O	LFDVD	LF Motor drive signal (D)
5	–	LFCOM1	LF Motor common 1 voltage (+42 V)
6	–	LFCOM2	LF Motor common 2 voltage (+42 V)

7.2.2 Wiring connection diagram

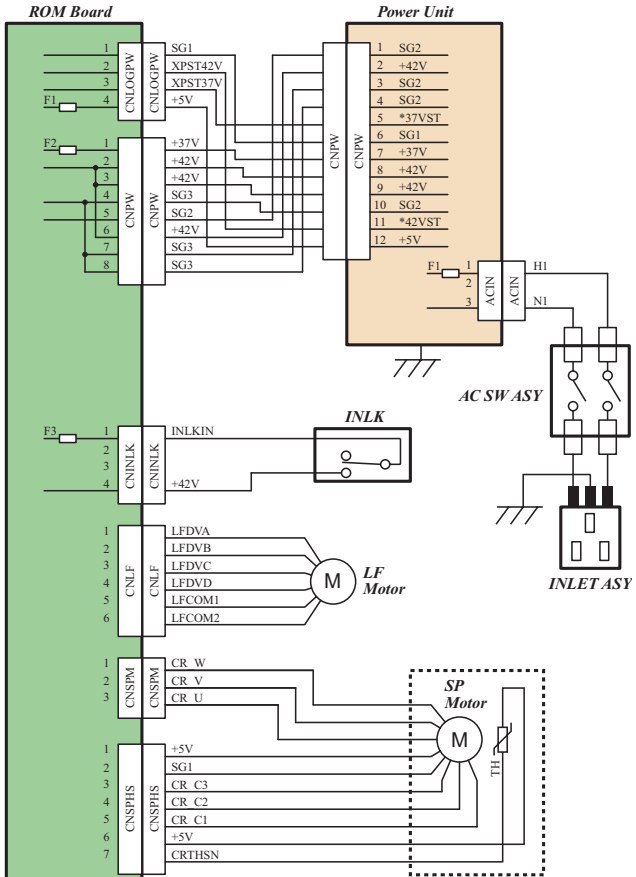

Figure 7-2. Power Supply, LF Motor, SP Motor

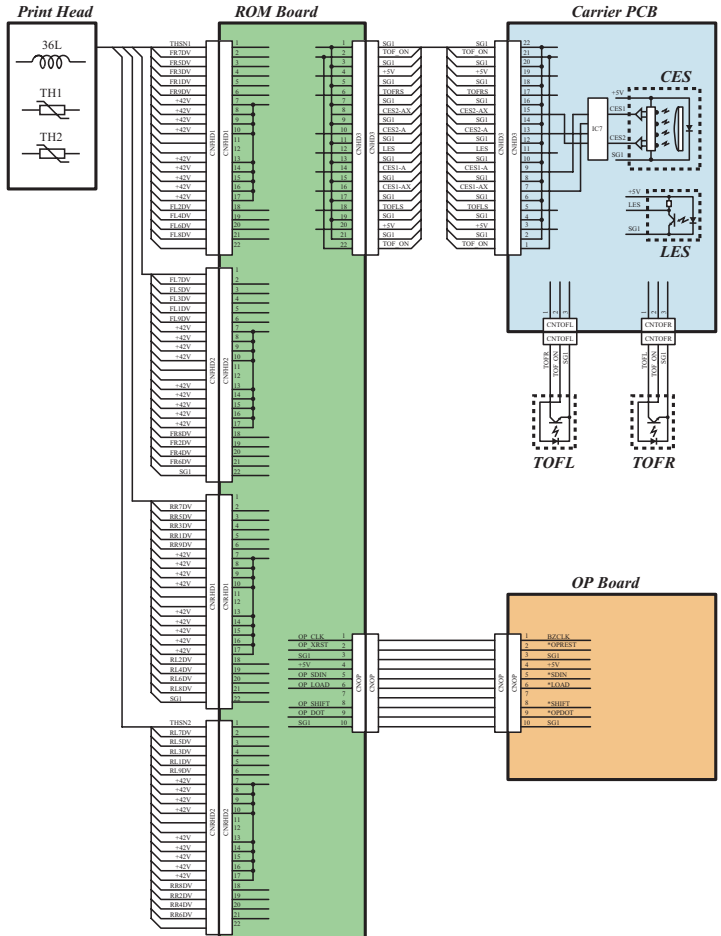

Figure 7-3. OP Unit, Print Head

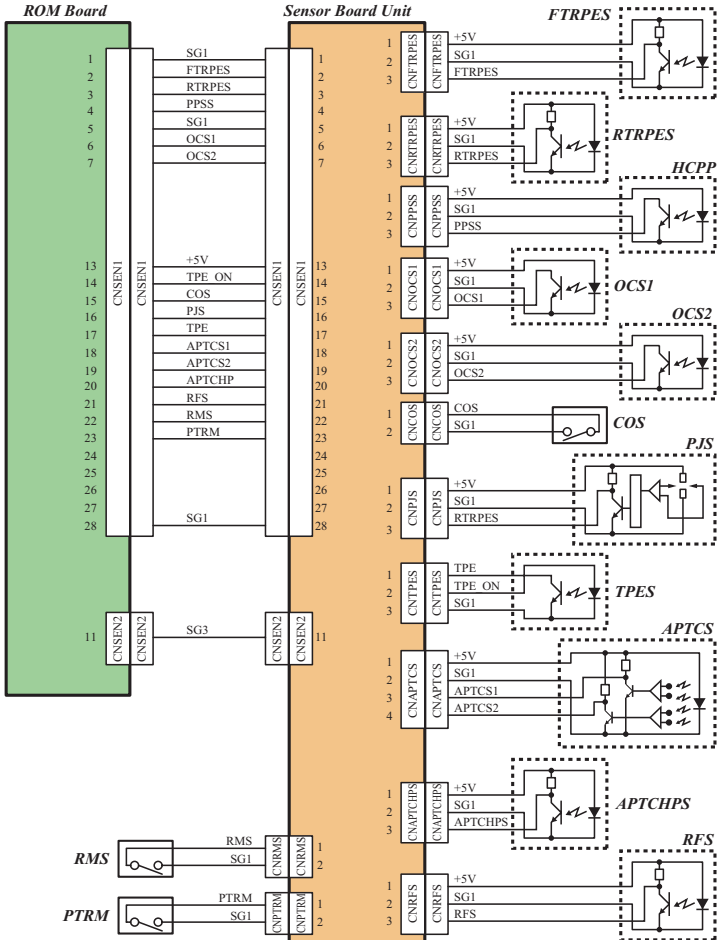

Figure 7-4. Sensors

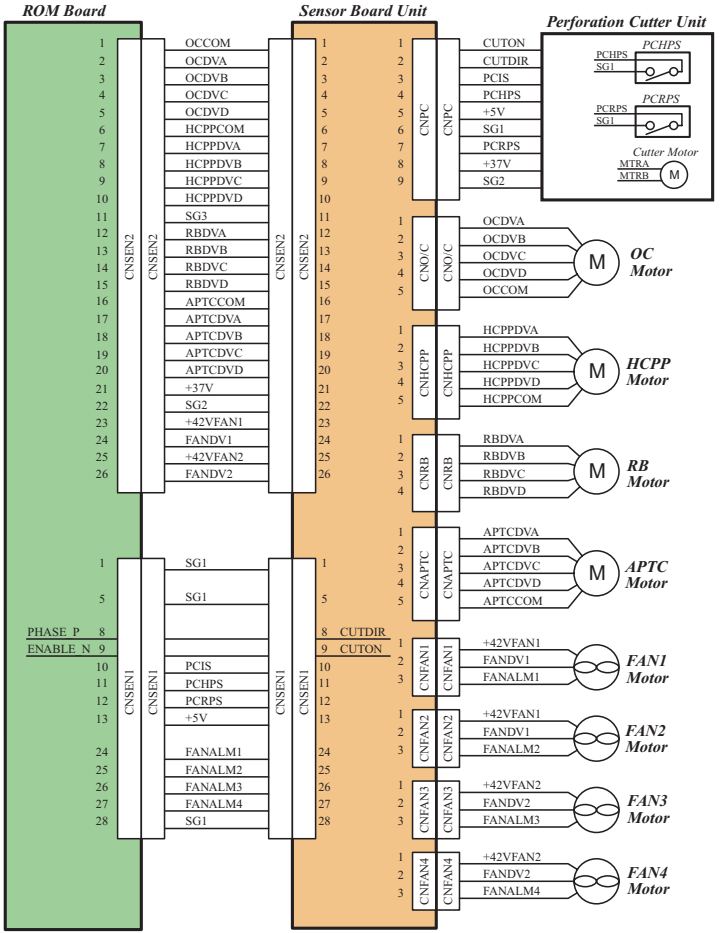

Figure 7-5. Perforation Cutter Unit, Motors

7.3 Electric Circuit Diagrams

The following page show circuit diagrams below.

- ROM BOARD (WD04A*) circuit diagram

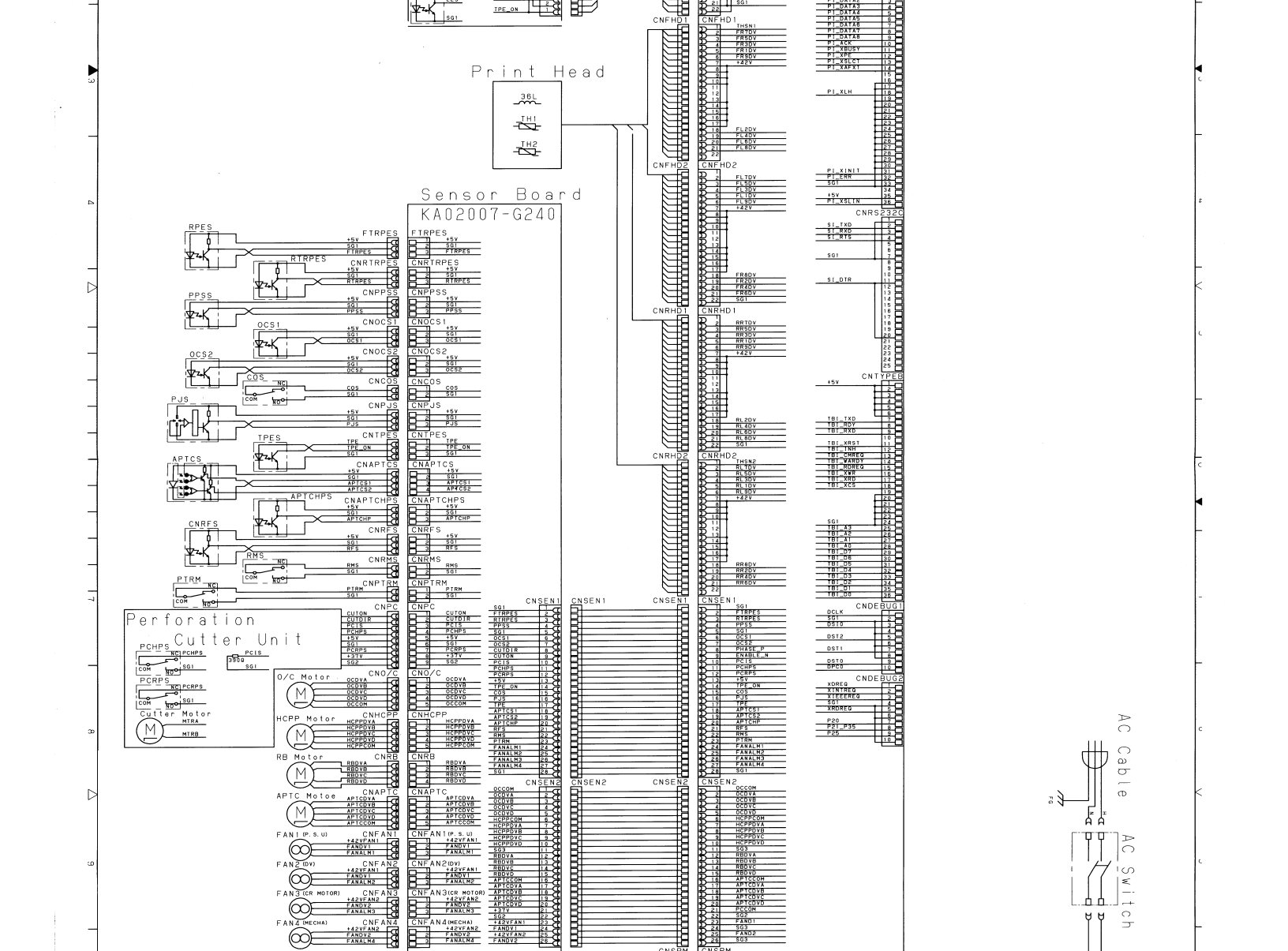
Print Head
36L
TH1
TH2
Sensor Board
KA02007-G240
Perforation
Cutter Unit
AC Cable
AC Switch

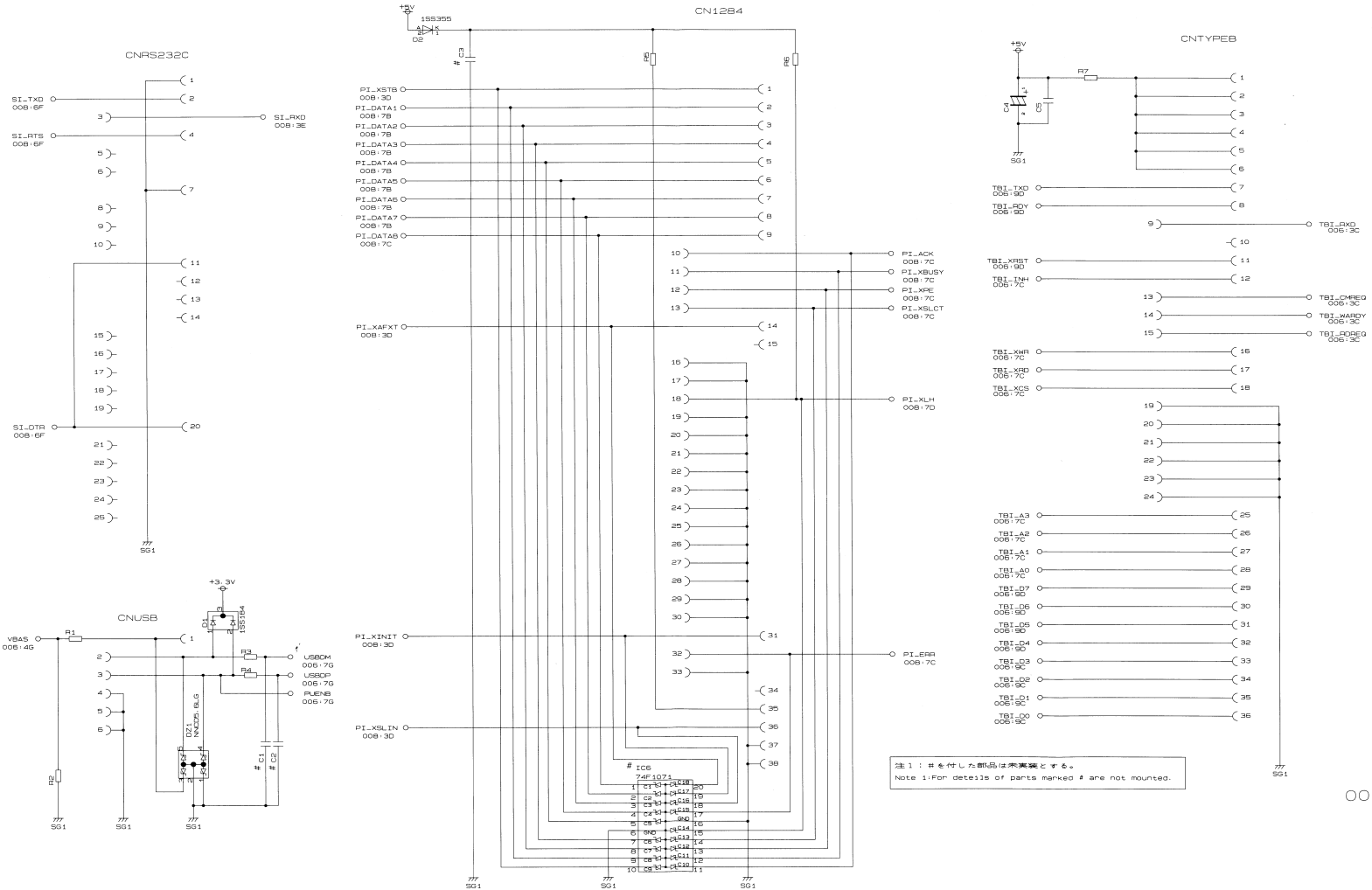
CNRS232C
SI_TXD 008:6F
SI_RXD 008:3E
SI_RTS 008:6F
SI_DTR 008:6F
SG1
CNUSB
+3.3V
VBAS 006:4G
R1
R2
R3
R4
D1
USBDM 006:7G
USBDP 006:7G
PUENB 006:7G
DZ1 NNCD5.6LG
C1
C2
CN1284
+5V
1SS355
C3
R5
R6
PI_XSTB 008:3D
PI_DATA1 008:7B
PI_DATA2 008:7B
PI_DATA3 008:7B
PI_DATA4 008:7B
PI_DATA5 008:7B
PI_DATA6 008:7B
PI_DATA7 008:7B
PI_DATA8 008:7C
PI_ACK 008:7C
PI_XBUSY 008:7C
PI_XPE 008:7C
PI_XSLCT 008:7C
PI_XAFXT 008:3D
PI_XLH 008:7D
PI_XINIT 008:3D
PI_ERR 008:7C
PI_XSLIN 008:3D
IC6
74F1071
CNTYPEB
+5V
R7
C4
C5
TBI_TXD 006:9D
TBI_RDY 006:9D
TBI_RXD 006:3C
TBI_XRST 006:9D
TBI_INH 006:7C
TBI_CMREQ 006:3C
TBI_WARDY 006:3C
TBI_RDREQ 006:3C
TBI_XWR 006:7C
TBI_XRD 006:7C
TBI_XCS 006:7C
TBI_A3 006:7C
TBI_A2 006:7C
TBI_A1 006:7C
TBI_A0 006:7C
TBI_D7 006:9D
TBI_D6 006:9D
TBI_D5 006:9D
TBI_D4 006:9D
TBI_D3 006:9C
TBI_D2 006:9C
TBI_D1 006:9C
TBI_D0 006:9C
注１：＃を付した部品は未実装とする。
Note 1:For details of parts marked # are not mounted.
001

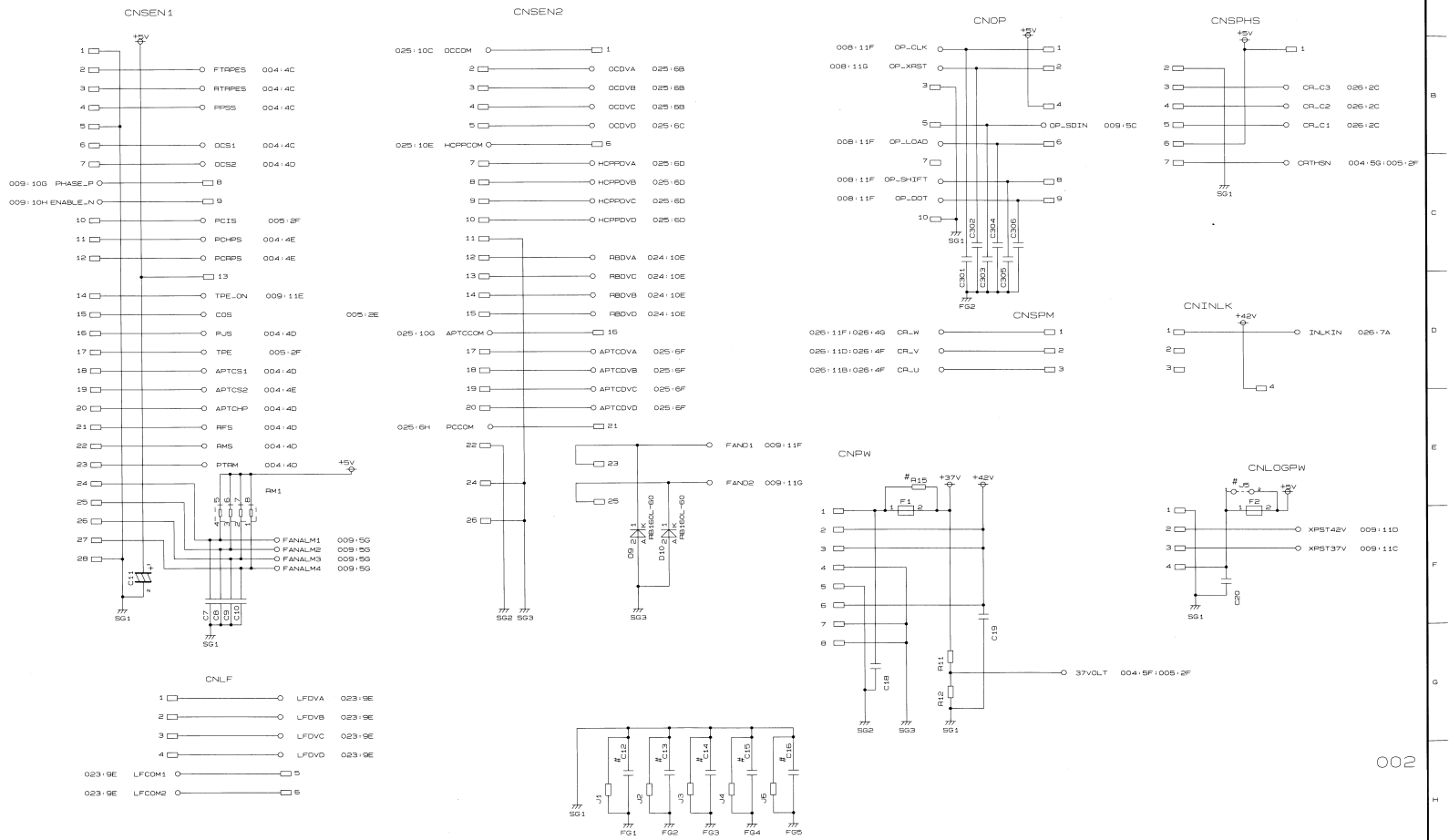
CNSEN1
+5V
1
2 FTAPES 004:4C
3 RTAPES 004:4C
4 PPSS 004:4C
5
6 OCS1 004:4C
7 OCS2 004:4D
009:10G PHASE_P 8
009:10H ENABLE_N 9
10 PCIS 005:2F
11 PCHPS 004:4E
12 PCRPS 004:4E
13
14 TPE_ON 009:11E
15 COS 005:2E
16 PJS 004:4D
17 TPE 005:2F
18 APTCS1 004:4D
19 APTCS2 004:4E
20 APTCHP 004:4D
21 RFS 004:4D
22 RMS 004:4D
23 PTRM 004:4D
24
25
26
27 FANALM1 009:5G
28 FANALM2 009:5G
FANALM3 009:5G
FANALM4 009:5G
RM1
C11
C7 C8 C9 C10
SG1
SG1
CNSEN2
025:10C OCCOM 1
2 OCDVA 025:6B
3 OCDVB 025:6B
4 OCDVC 025:6B
5 OCDVD 025:6C
025:10E HCPPCOM 6
7 HCPPDVA 025:6D
8 HCPPDVB 025:6D
9 HCPPDVC 025:6D
10 HCPPDVD 025:6D
11
12 RBDVA 024:10E
13 RBDVC 024:10E
14 RBDVB 024:10E
15 RBDVD 024:10E
025:10G APTCCOM 16
17 APTCDVA 025:6F
18 APTCDVB 025:6F
19 APTCDVC 025:6F
20 APTCDVD 025:6F
025:6H PCCOM 21
22
23
24
25
26
SG2 SG3
FAND1 009:11F
FAND2 009:11G
D9 D10
RB160L-60
SG3
CNOP
+5V
008:11F OP_CLK 1
008:11G OP_XRST 2
3
4
5 OP_SDIN 009:5C
008:11F OP_LOAD 6
7
008:11F OP_SHIFT 8
008:11F OP_DOT 9
10
SG1
C302 C304 C306
C301 C303 C305
FG2
CNSPHS
+5V
1
2
3 CR_C3 026:2C
4 CR_C2 026:2C
5 CR_C1 026:2C
6
7 CRTHSN 004:5G 005:2F
SG1
CNSPM
026:11F 026:4G CR_W 1
026:11D 026:4F CR_V 2
026:11B 026:4F CR_U 3
CNINLK
+42V
1 INLKIN 026:7A
2
3
4
CNPW
#R15
+37V
+42V
F1
1
2
C18
C19
R11
R12
37VOLT 004:5F 005:2F
SG2 SG3 SG1
CNLOGPW
#J5
+5V
F2
1
2 XPST42V 009:11D
3 XPST37V 009:11C
4
C20
SG1
CNL_F
1 LFDVA 023:9E
2 LFDVB 023:9E
3 LFDVC 023:9E
4 LFDVD 023:9E
023:9E LFCOM1 5
023:9E LFCOM2 6
SG1
#C12 #C13 #C14 #C15 #C16
J1 J2 J3 J4 J5
FG1 FG2 FG3 FG4 FG5
002

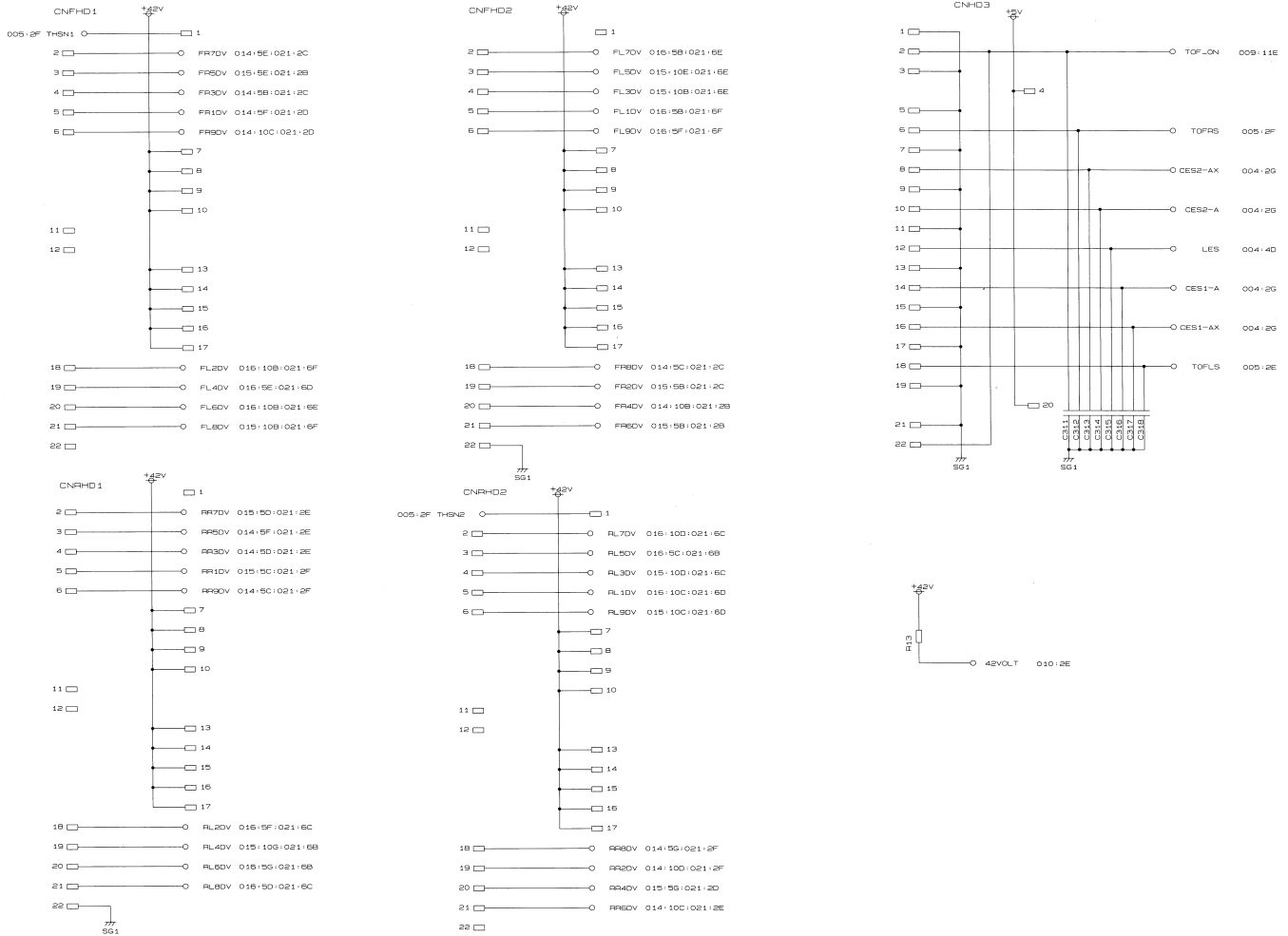
CNFHD1
+42V
005:2F THSN1
FR7DV 014:5E:021:2C
FR5DV 015:5E:021:2B
FR3DV 014:5B:021:2C
FR1DV 014:5F:021:2D
FR9DV 014:10C:021:2D
FL2DV 016:10B:021:6F
FL4DV 016:5E:021:6D
FL6DV 016:10B:021:6E
FL8DV 015:10B:021:6F
SG1
CNFHD2
+42V
FL7DV 016:5B:021:6E
FL5DV 015:10E:021:6E
FL3DV 015:10B:021:6E
FL1DV 016:5B:021:6F
FL9DV 016:5F:021:6F
FR8DV 014:5C:021:2C
FR2DV 015:5B:021:2C
FR4DV 014:10B:021:2B
FR6DV 015:5B:021:2B
SG1
CNHD3
+5V
TOF_ON 009:11E
TOFRS 005:2F
CES2-AX 004:2G
CES2-A 004:2G
LES 004:4D
CES1-A 004:2G
CES1-AX 004:2G
TOFLS 005:2E
C311
C312
C313
C314
C315
C316
C317
C318
SG1
CNRHD1
+42V
AR7DV 015:5D:021:2E
AR5DV 014:5F:021:2E
AR3DV 014:5D:021:2E
AR1DV 015:5C:021:2F
AR9DV 014:5C:021:2F
AL2DV 016:5F:021:6C
AL4DV 015:10G:021:6B
AL6DV 016:5G:021:6B
AL8DV 016:5D:021:6C
SG1
CNRHD2
+42V
005:2F THSN2
AL7DV 016:10D:021:6C
AL5DV 016:5C:021:6B
AL3DV 015:10D:021:6C
AL1DV 016:10C:021:6D
AL9DV 015:10C:021:6D
AR8DV 014:5G:021:2F
AR2DV 014:10D:021:2F
AR4DV 015:5G:021:2D
AR6DV 014:10C:021:2E
+42V
R13
42VOLT 010:2E

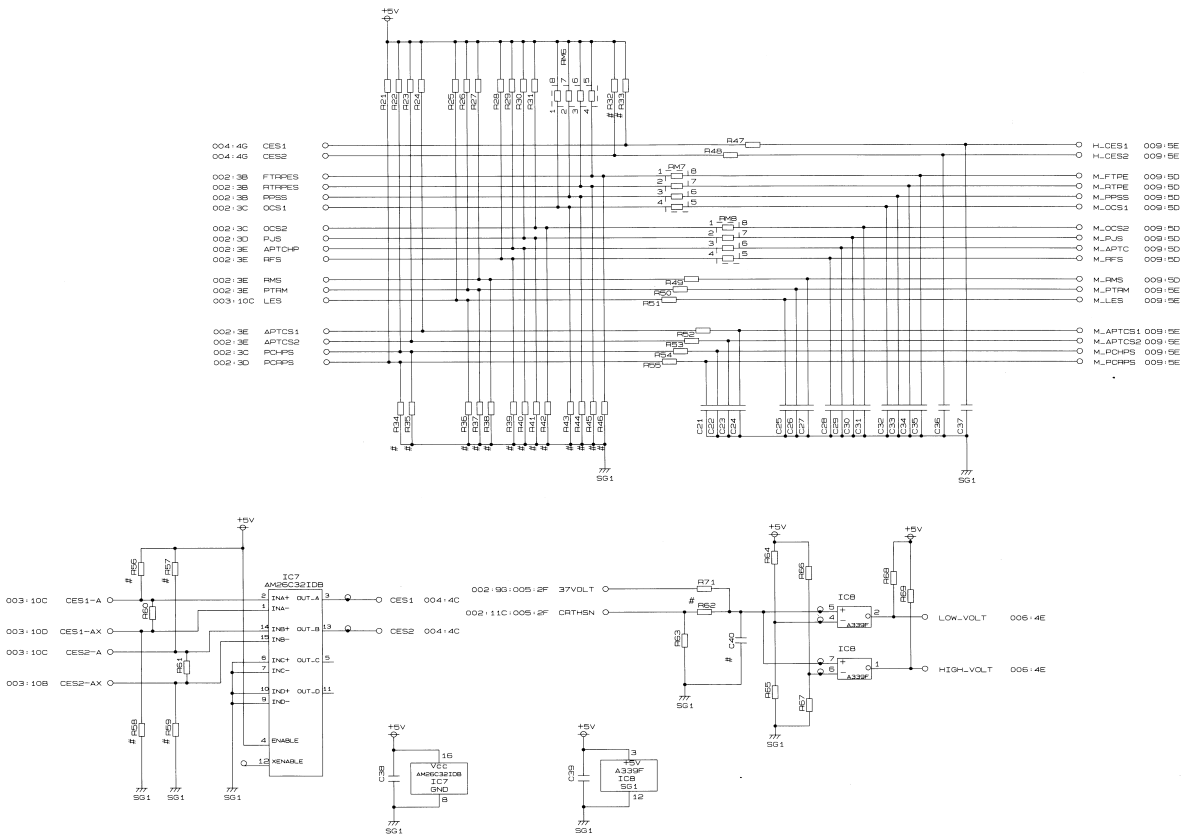
004:4G CES1
004:4G CES2
002:3B FTRPES
002:3B FTRPES
002:3B RPSS
002:3C OCS1
002:3C OCS2
002:3D PJS
002:3E APTCHP
002:3E RFS
002:3E RMS
002:3E PTRM
003:10C LES
002:3E APTCS1
002:3E APTCS2
002:3C PCHPS
002:3D PCRPS
M_CES1 009:5E
M_CES2 009:5E
M_FTPE 009:5D
M_FTPE 009:5D
M_RPSS 009:5D
M_OCS1 009:5D
M_OCS2 009:5D
M_PJS 009:5D
M_APTC 009:5D
M_RFS 009:5D
M_RMS 009:5D
M_PTRM 009:5E
M_LES 009:5E
M_APTCS1 009:5E
M_APTCS2 009:5E
M_PCHPS 009:5E
M_PCRPS 009:5E
+5V
SG1
IC7
AM26C32IDB
003:10C CES1-A
003:10D CES1-AX
003:10C CES2-A
003:10B CES2-AX
CES1 004:4C
CES2 004:4C
002:9G:005:2F 37VOLT
002:11C:005:2F CATHSN
IC8
A339F
LOW_VOLT 006:4E
HIGH_VOLT 006:4E

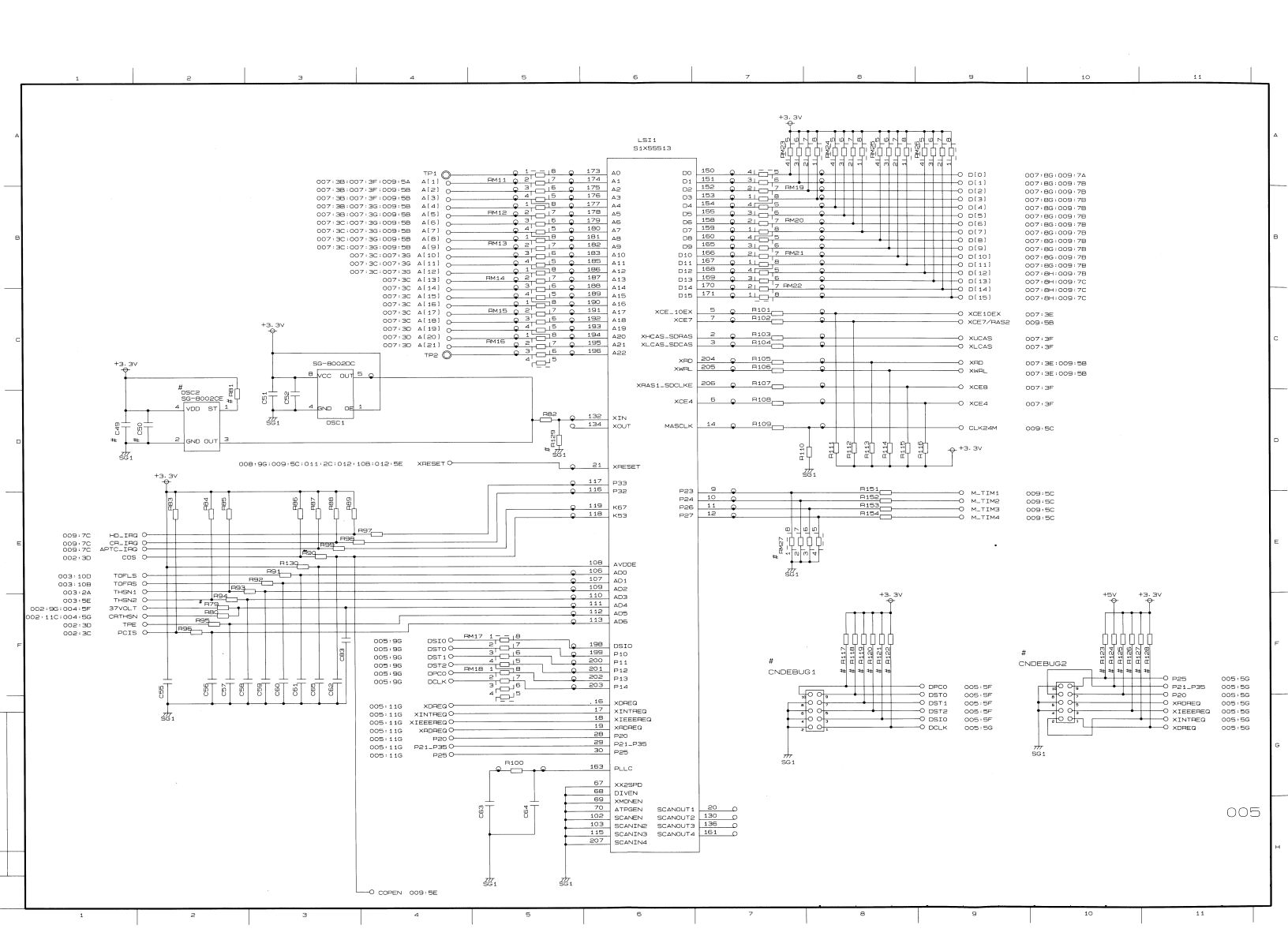
LSI1
S1X55513
SG-8002DC
DSC2
SG-8002CE
DSC1
CNDEBUG1
CNDEBUG2
+3.3V
+5V
SG1
COPEN 009:5E
005

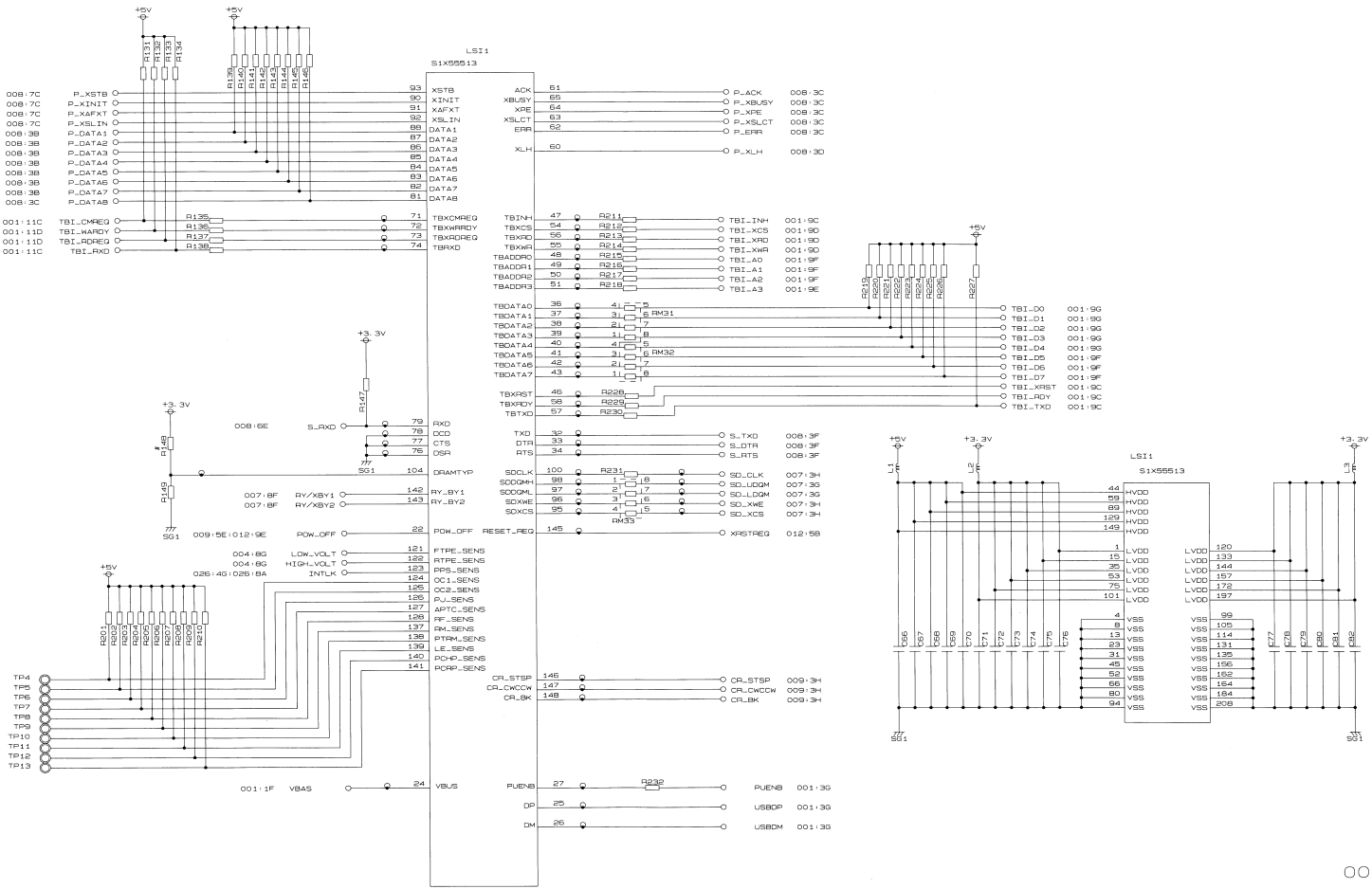
LSI1
S1X55513
+5V
+3.3V
P_XSTB
P_XINIT
P_XAFXT
P_XSLIN
P_DATA1
P_DATA2
P_DATA3
P_DATA4
P_DATA5
P_DATA6
P_DATA7
P_DATA8
TBI_CMREQ
TBI_WARDY
TBI_RDREQ
TBI_RXD
XSTB
XINIT
XAFXT
XSLIN
DATA1
DATA2
DATA3
DATA4
DATA5
DATA6
DATA7
DATA8
TBXCMREQ
TBXWARDY
TBXRDREQ
TBRXD
ACK
XBUSY
XPE
XSLCT
ERR
XLH
P_ACK
P_XBUSY
P_XPE
P_XSLCT
P_ERR
P_XLH
TBINH
TBXCS
TBXRD
TBXWR
TBADDR0
TBADDR1
TBADDR2
TBADDR3
TBI_INH
TBI_XCS
TBI_XRD
TBI_XWR
TBI_A0
TBI_A1
TBI_A2
TBI_A3
TBDATA0
TBDATA1
TBDATA2
TBDATA3
TBDATA4
TBDATA5
TBDATA6
TBDATA7
TBI_D0
TBI_D1
TBI_D2
TBI_D3
TBI_D4
TBI_D5
TBI_D6
TBI_D7
TBXRST
TBXRDY
TBTXD
TBI_XRST
TBI_RDY
TBI_TXD
S_RXD
RXD
DCD
CTS
DSR
DRAMTYP
TXD
DTR
RTS
S_TXD
S_DTR
S_RTS
SDCLK
SDQMH
SDQML
SDWE
SDXCS
SD_CLK
SD_UDQM
SD_LDQM
SD_XWE
SD_XCS
RY_BY1
RY_BY2
POW_OFF
RESET_REQ
XRSTREQ
LOW_VOLT
HIGH_VOLT
INTLK
FTPE_SENS
RTPE_SENS
RPS_SENS
OC1_SENS
OC2_SENS
PJ_SENS
APTC_SENS
RF_SENS
RM_SENS
PTRM_SENS
LE_SENS
PCHP_SENS
PCRP_SENS
CR_STSP
CR_CWCCW
CR_BK
VBAS
PUENB
DP
DM
USBDP
USBDM
TP4
TP5
TP6
TP7
TP8
TP9
TP10
TP11
TP12
TP13
HVDD
LVDD
VSS

006

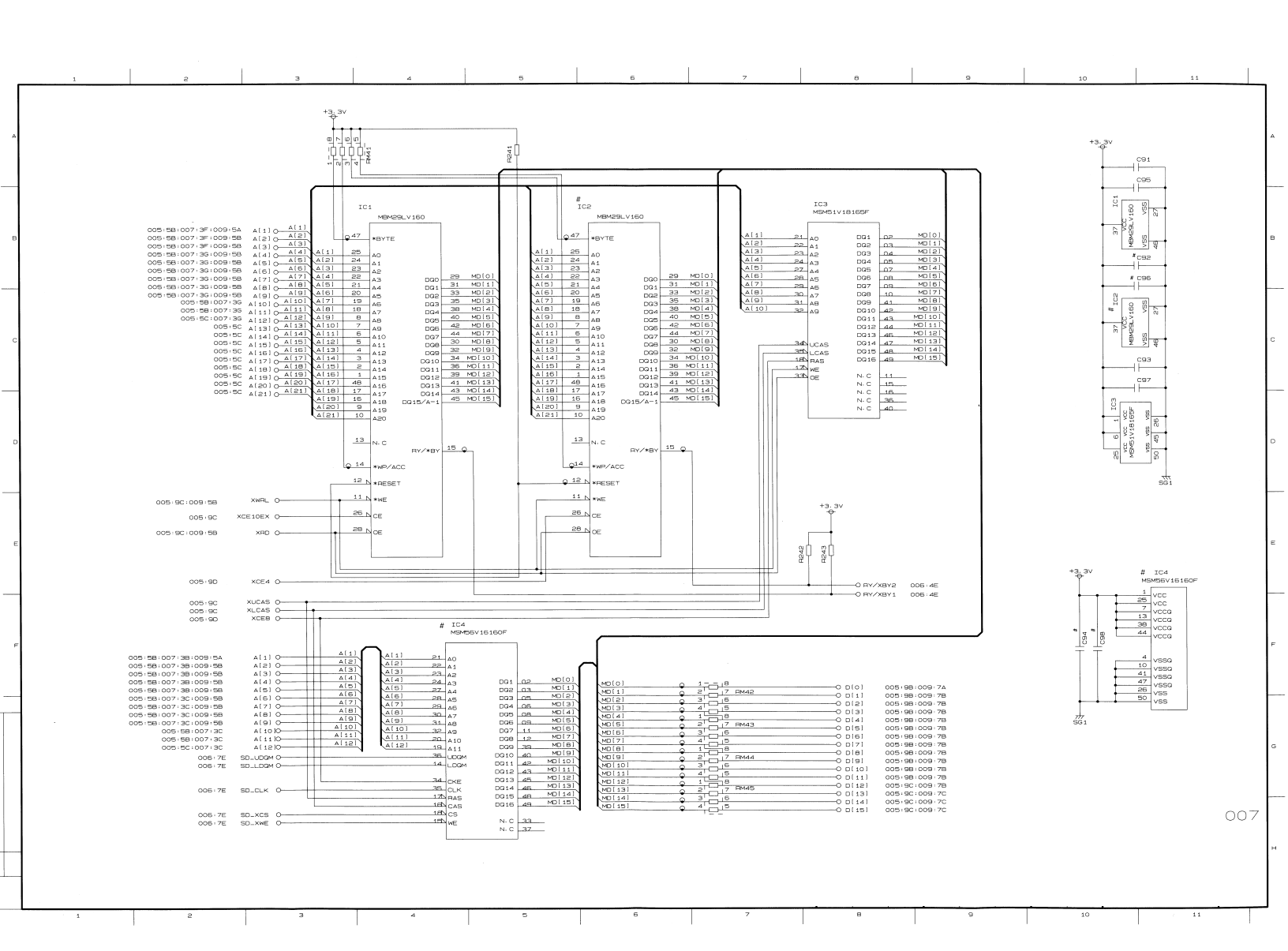
+3.3V
RM41
R241
IC1
MBM29LV160
IC2
MBM29LV160
IC3
MSM51V18165F
*BYTE
*WP/ACC
*RESET
*WE
CE
OE
RY/*BY
N.C
R242
R243
RY/XBY2
RY/XBY1
IC4
MSM56V16160F
RM42
RM43
RM44
RM45
SG1
C91
C95
C92
C96
C93
C97
C94
C98
XWRL
XCE10EX
XRD
XCE4
XUCAS
XLCAS
XCE8
SD_UDQM
SD_LDQM
SD_CLK
SD_XCS
SD_XWE

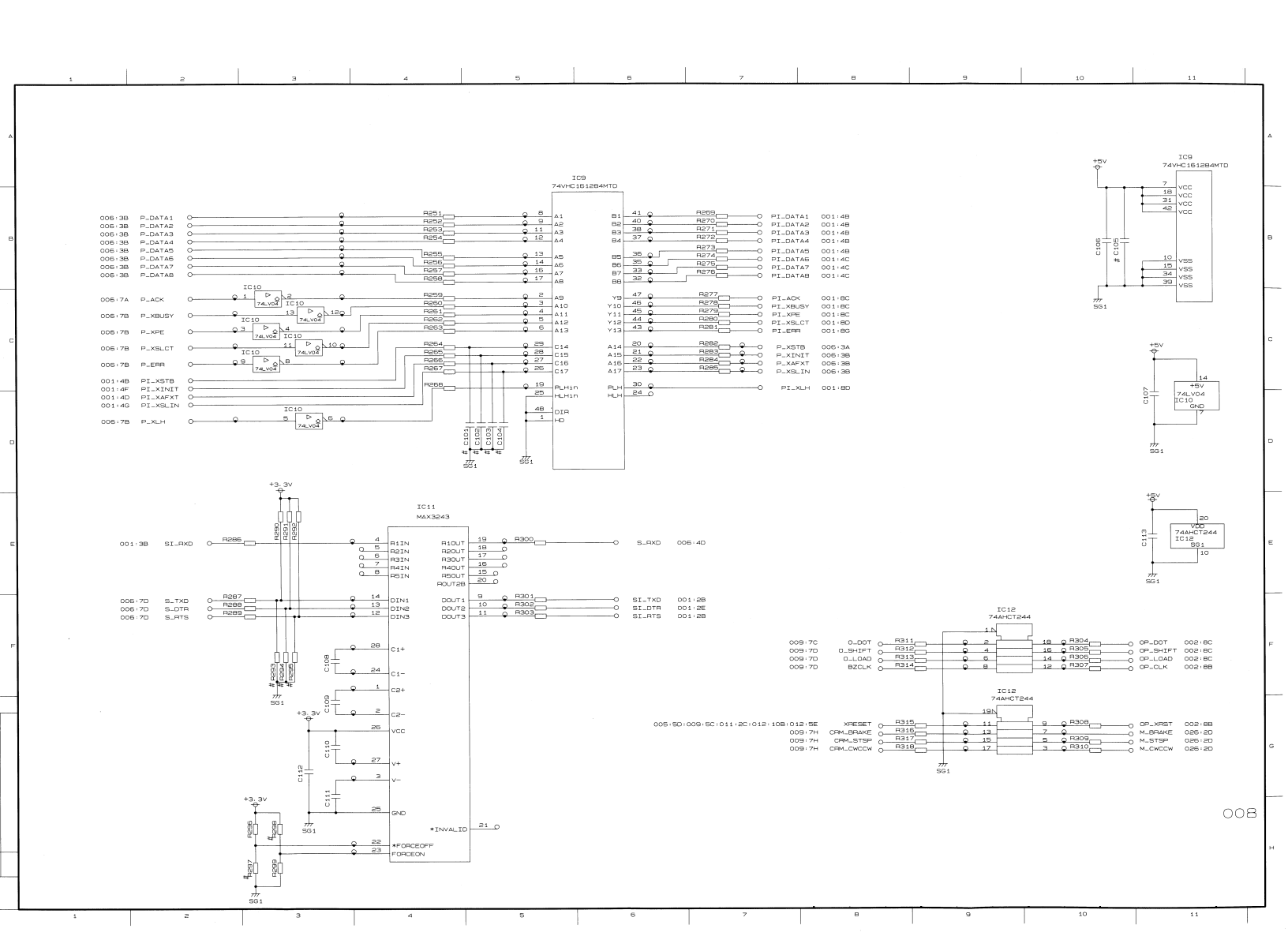
IC9
74VHC161284MTD
006:3B P_DATA1
006:3B P_DATA2
006:3B P_DATA3
006:3B P_DATA4
006:3B P_DATA5
006:3B P_DATA6
006:3B P_DATA7
006:3B P_DATA8
006:7A P_ACK
006:7B P_XBUSY
006:7B P_XPE
006:7B P_XSLCT
006:7B P_ERR
001:4B PI_XSTB
001:4F PI_XINIT
001:4D PI_XAFXT
001:4G PI_XSLIN
006:7B P_XLH
PI_DATA1 001:4B
PI_DATA2 001:4B
PI_DATA3 001:4B
PI_DATA4 001:4B
PI_DATA5 001:4B
PI_DATA6 001:4C
PI_DATA7 001:4C
PI_DATA8 001:4C
PI_ACK 001:8C
PI_XBUSY 001:8C
PI_XPE 001:8C
PI_XSLCT 001:8D
PI_ERR 001:8G
P_XSTB 006:3A
P_XINIT 006:3B
P_XAFXT 006:3B
P_XSLIN 006:3B
PI_XLH 001:8D
IC10
74LV04
IC11
MAX3243
001:3B SI_RXD
006:7D S_TXD
006:7D S_DTR
006:7D S_RTS
S_RXD 006:4D
SI_TXD 001:2B
SI_DTR 001:2E
SI_RTS 001:2B
*INVAL_IO
*FORCEOFF
FORCEON
IC12
74AHCT244
009:7C O_DOT
009:7D O_SHIFT
009:7D O_LOAD
009:7D BZCLK
OP_DOT 002:8C
OP_SHIFT 002:8C
OP_LOAD 002:8C
OP_CLK 002:8B
005:5D:009:5C:011:2C:012:10B:012:5E XRESET
009:7H CPM_BRAKE
009:7H CPM_STSP
009:7H CPM_CWCCW
OP_XRST 002:8B
M_BRAKE 026:2D
M_STSP 026:2D
M_CWCCW 026:2D
+5V
+3.3V
SG1

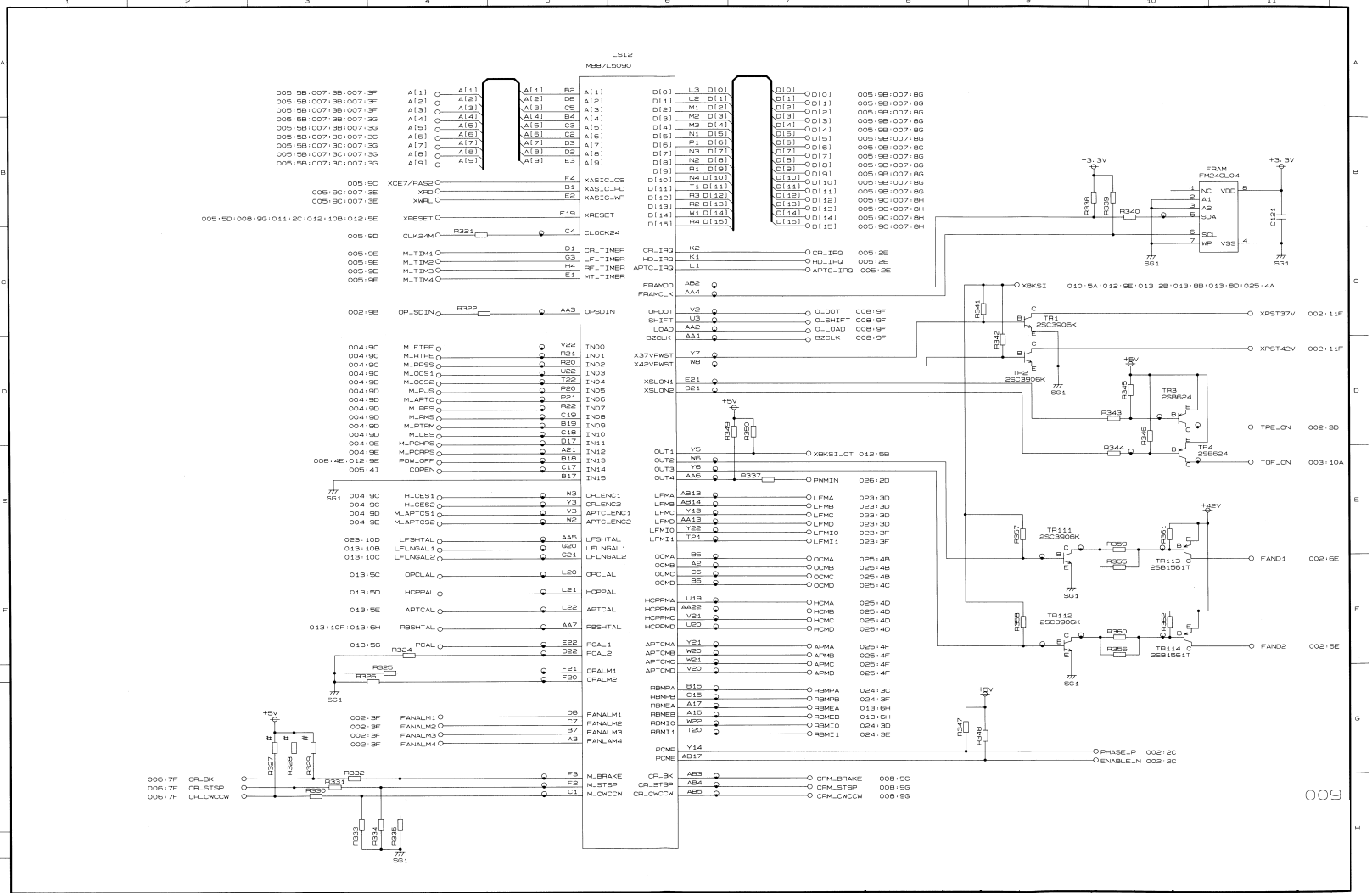
LSI2
MB87L5090
FRAM
FM24CL04
XBKSI
XPST37V
XPST42V
TPE_ON
TOF_ON
FAND1
FAND2
PHASE_P
ENABLE_N
CR_BK
CR_STSP
CR_CWCCW
SG1
+3.3V
+5V
+42V
009

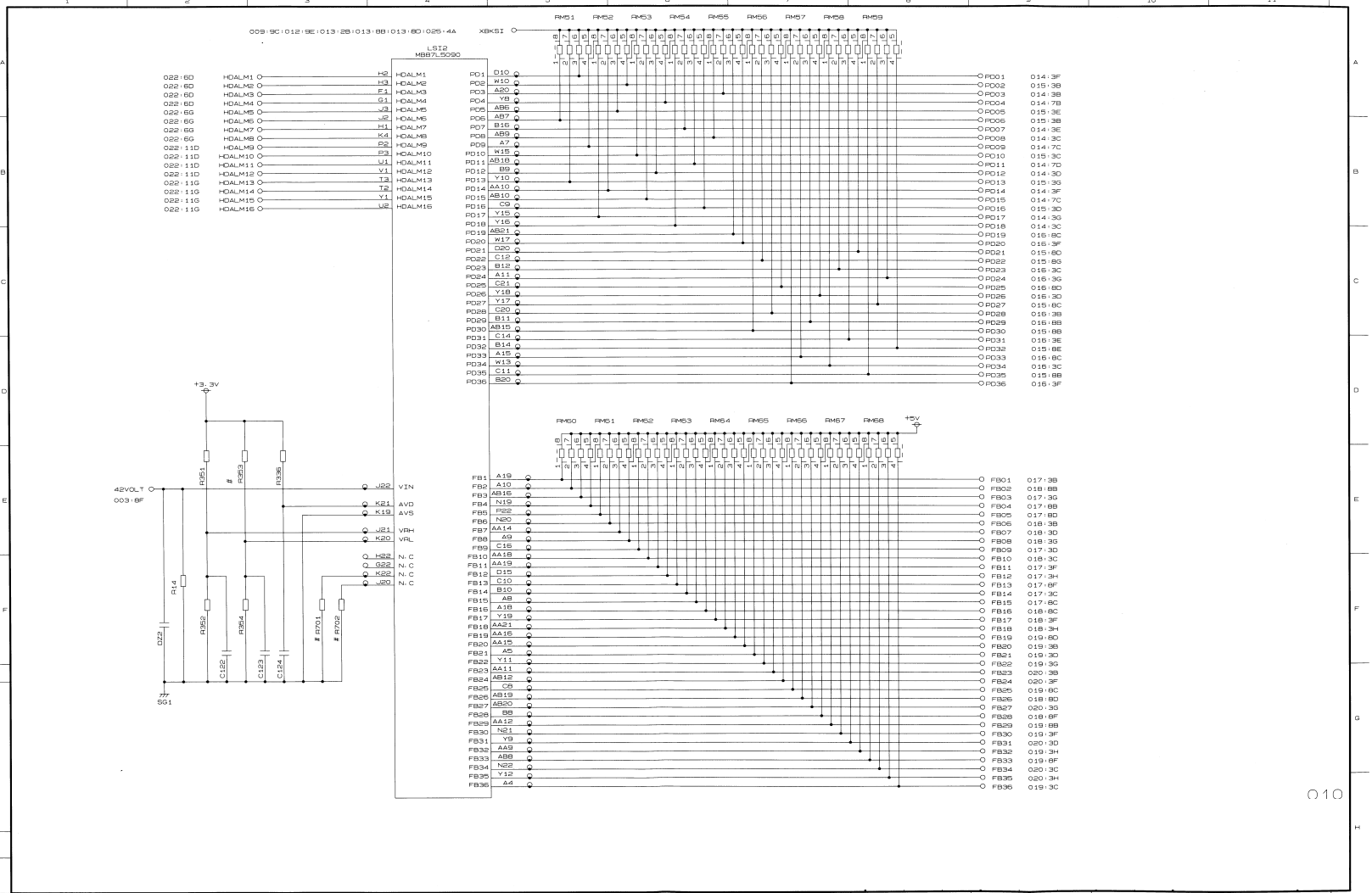

009:9C:012:9E:013:2B:013:8B:013:8D:025:4A
XBKSI
LSI2
MB87L5090
RM51 RM52 RM53 RM54 RM55 RM56 RM57 RM58 RM59
RM60 RM61 RM62 RM63 RM64 RM65 RM66 RM67 RM68
+5V
+3.3V
42VOLT
003:8F
SG1
VIN
AVD
AVS
VRH
VRL
N.C
R351
R353
R336
R14
R352
R354
R701
R702
C122
C123
C124
D22

010

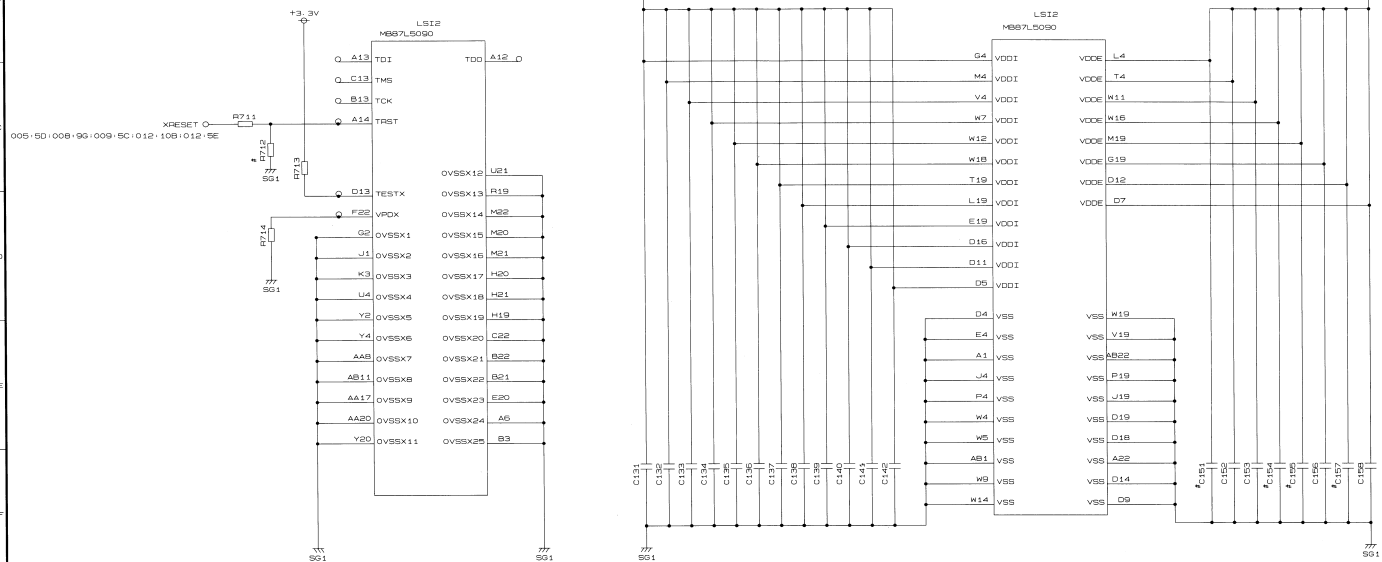
+3.3V
LSI2
MB87L5090
XRESET
005·5D·008·9G·009·5C·012·10B·012·5E
R711
R712
R713
R714
SG1
TDI
TMS
TCK
TRST
TESTX
VPDX
TDO
OVSSX1
OVSSX2
OVSSX3
OVSSX4
OVSSX5
OVSSX6
OVSSX7
OVSSX8
OVSSX9
OVSSX10
OVSSX11
OVSSX12
OVSSX13
OVSSX14
OVSSX15
OVSSX16
OVSSX17
OVSSX18
OVSSX19
OVSSX20
OVSSX21
OVSSX22
OVSSX23
OVSSX24
OVSSX25
+3.3V
+5V
L4
L5
VDDI
VSS
VDDE
C131
C132
C133
C134
C135
C136
C137
C138
C139
C140
C141
C142
C151
C152
C153
C154
C155
C156
C157
C158

011

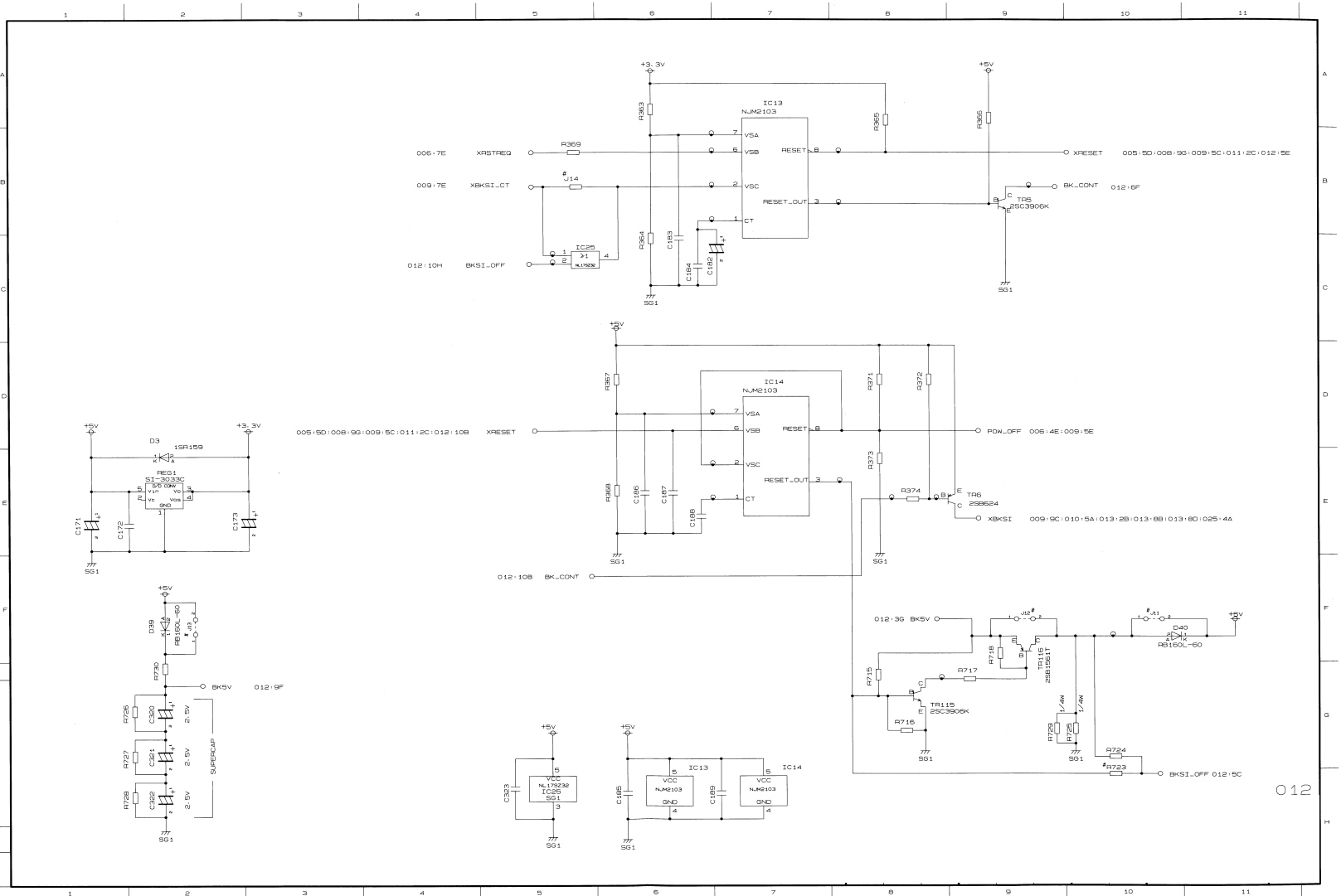

+3.3V
+5V
IC13
NJM2103
VSA
VSB
VSC
CT
RESET
RESET_OUT
R363
R365
R366
R369
J14
R364
C183
C184
C182
006:7E XRSTREQ
009:7E XBKSI_CT
012:10H BKSI_OFF
IC25
NL17S32
XRESET 005:5D:008:9G:009:5C:011:2C:012:5E
BK_CONT 012:6F
TR5
2SC3906K
SG1
IC14
NJM2103
R367
R368
C186
C187
C188
R371
R372
R373
R374
005:5D:008:9G:009:5C:011:2C:012:10B XRESET
POW_OFF 006:4E:009:5E
TR6
2SB624
XBKSI 009:9C:010:5A:013:2B:013:8B:013:8D:025:4A
012:10B BK_CONT
D3
1SR159
REG1
SI-3033C
C171
C172
C173
D39
RB160L-60
R730
BK5V 012:9F
R726
R727
R728
C320
C321
C322
2.5V
SUPERCAP
012:3G BK5V
J12
J11
D40
RB160L-60
R718
TR116
2SB1561T
R715
R717
TR115
2SC3906K
R716
R729
R725
1/4W
R724
R723
BKSI_OFF 012:5C
C323
VCC
NL17S32
IC25
C185
IC13
NJM2103
C189
IC14
012

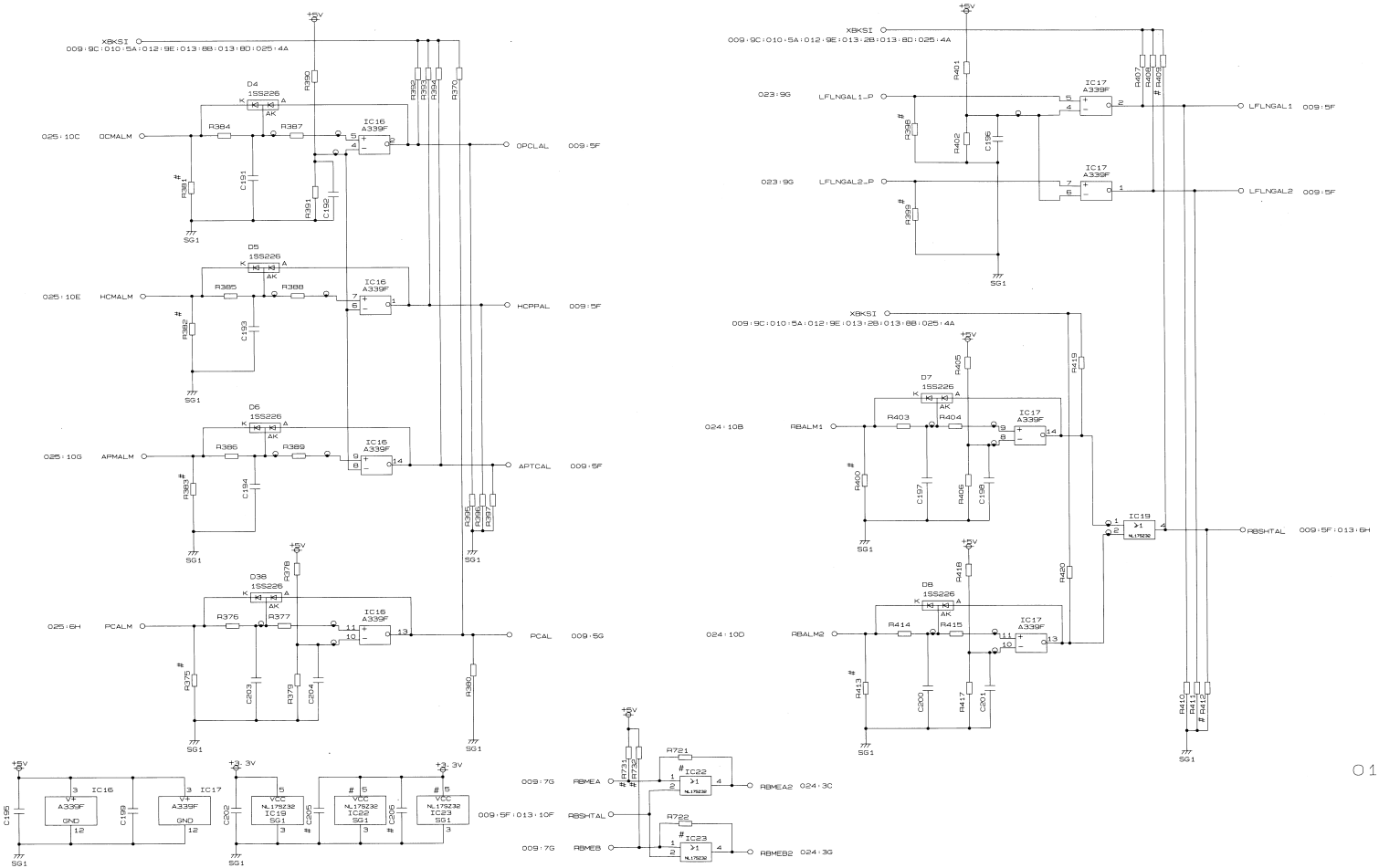
XBKSI
009:9C:010:5A:012:9E:013:88:013:8D:025:4A
+5V
D4
1SS226
IC16
A339F
025:10C
OCMALM
OPCLAL
009:5F
D5
025:10E
HCMALM
HCPPAL
D6
025:10G
APMALM
APTCAL
D38
025:6H
PCALM
PCAL
009:5G
SG1
+3.3V
IC16
IC17
IC19
IC22
IC23
NJL17S232
009:5F:013:10F
RBSHTAL
009:7G
RBMEA
RBMEB
R721
R722
IC22
IC23
RBMEA2
024:3C
RBMEB2
024:3G
XBKSI
009:9C:010:5A:012:9E:013:28:013:8D:025:4A
023:9G
LFLNGAL1_P
LFLNGAL2_P
IC17
LFLNGAL1
009:5F
LFLNGAL2
009:5F
D7
024:10B
RBALM1
D8
024:10D
RBALM2
IC19
RBSHTAL
009:5F:013:6H
013

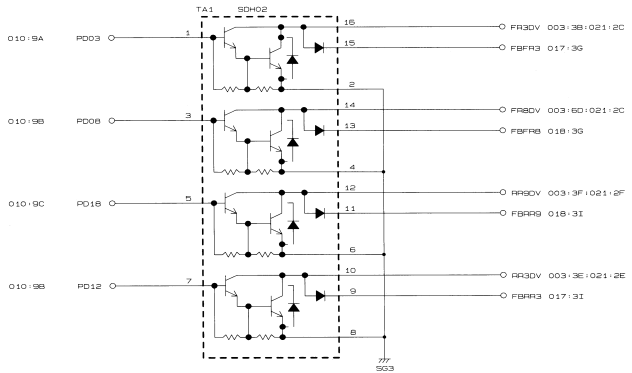
TA1
SDH02
010:9A
PD03
FR3DV 003:3B:021:2C
FBFR3 017:3G
010:9B
PD08
FR8DV 003:6D:021:2C
FBFR8 018:3G
010:9C
PD18
RR9DV 003:3F:021:2F
FBRR9 018:3I
010:9B
PD12
RR3DV 003:3E:021:2E
FBRR3 017:3I
SG3

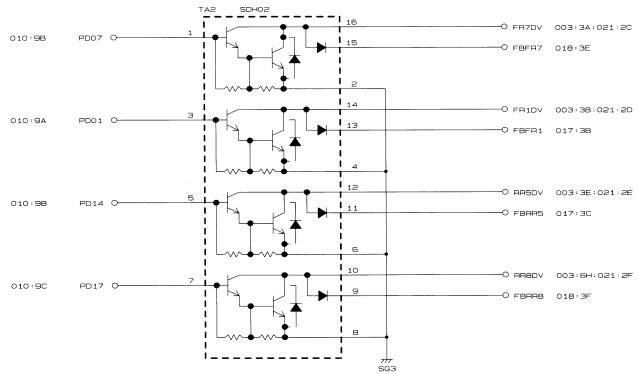
TA2
SDH02
010:9B
PD07
FR7DV 003:3A:021:2C
FBFR7 018:3E
010:9A
PD01
FR1DV 003:3B:021:2D
FBFR1 017:3B
010:9B
PD14
RR5DV 003:3E:021:2E
FBRR5 017:3C
010:9C
PD17
RR8DV 003:6H:021:2F
FBRR8 018:3F
SG3

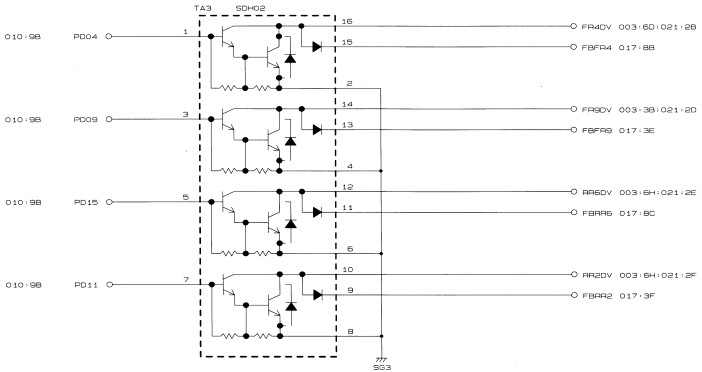
TA3
SDH02
010:9B
PD04
FR4DV 003:6D:021:2B
FBFR4 017:8B
010:9B
PD09
FR9DV 003:3B:021:2D
FBFR9 017:3E
010:9B
PD15
RR6DV 003:6H:021:2E
FBRR6 017:8C
010:9B
PD11
RR2DV 003:6H:021:2F
FBRR2 017:3F
SG3

014

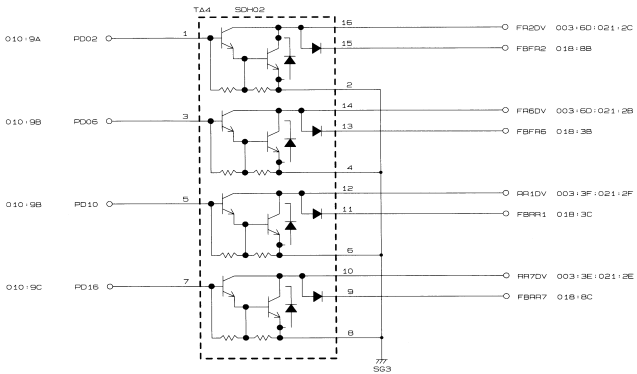
TA4 SDH02
010:9A PD02 1
010:9B PD06 3
010:9B PD10 5
010:9C PD16 7
16 15 2 14 13 4 12 11 6 10 9 8
FR2DV 003:6D:021:2C
FBFR2 018:8B
FR6DV 003:6D:021:2B
FBFR6 018:3B
RR1DV 003:3F:021:2F
FBRR1 018:3C
RR7DV 003:3E:021:2E
FBRR7 018:8C
SG3

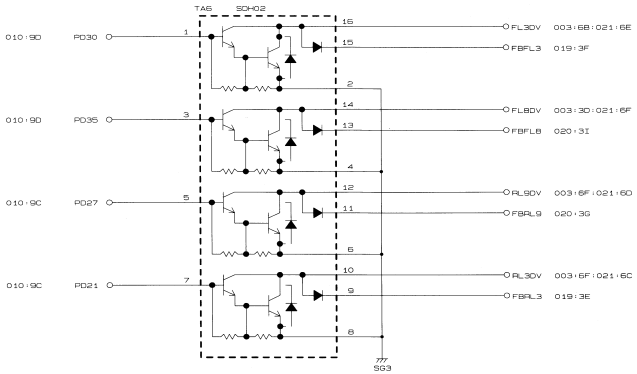
TA6 SDH02
010:9D PD30 1
010:9D PD35 3
010:9C PD27 5
010:9C PD21 7
16 15 2 14 13 4 12 11 6 10 9 8
FL3DV 003:6B:021:6E
FBFL3 019:3F
FL8DV 003:3D:021:6F
FBFL8 020:3I
RL9DV 003:6F:021:6D
FBRL9 020:3G
RL3DV 003:6F:021:6C
FBRL3 019:3E
SG3

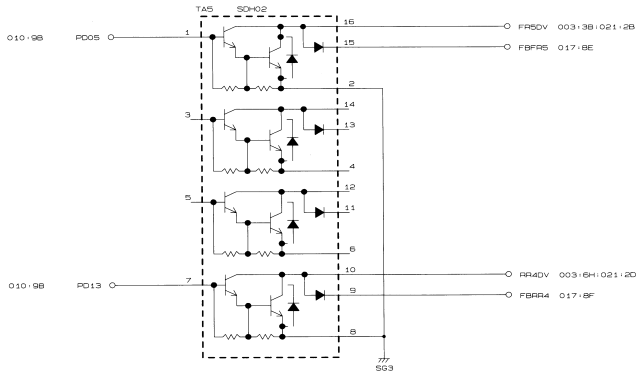
TA5 SDH02
010:9B PD05 1
010:9B PD13 7
16 15 2 14 13 4 12 11 6 10 9 8
FR5DV 003:3B:021:2B
FBFR5 017:8E
RR4DV 003:6H:021:2D
FBRR4 017:8F
SG3

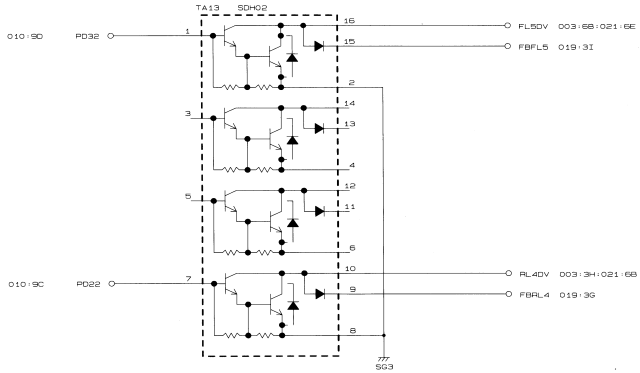
TA13 SDH02
010:9D PD32 1
010:9C PD22 7
16 15 2 14 13 4 12 11 6 10 9 8
FL5DV 003:6B:021:6E
FBFL5 019:3I
RL4DV 003:3H:021:6B
FBRL4 019:3G
SG3

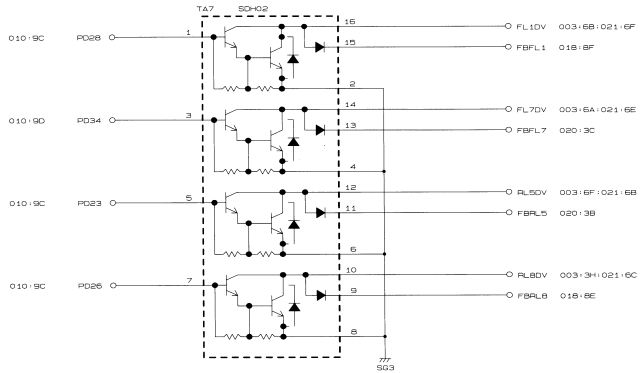
TA7 SDH02
010:9C PD28 1
010:9D PD34 3
010:9C PD23 5
010:9C PD26 7
16 FL1DV 003:6B:021:6F
15 FBFL1 018:8F
2
14 FL7DV 003:6A:021:6E
13 FBFL7 020:3C
4
12 RL5DV 003:6F:021:6B
11 FBRL5 020:3B
6
10 RL8DV 003:3H:021:6C
9 FBRL8 018:8E
8
SG3

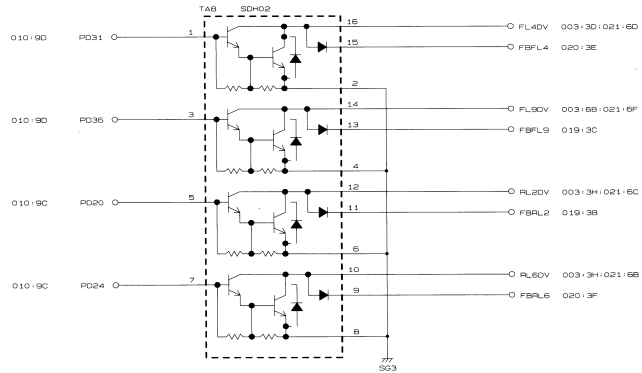
TA8 SDH02
010:9D PD31 1
010:9D PD36 3
010:9C PD20 5
010:9C PD24 7
16 FL4DV 003:3D:021:6D
15 FBFL4 020:3E
2
14 FL9DV 003:6B:021:6F
13 FBFL9 019:3C
4
12 RL2DV 003:3H:021:6C
11 FBRL2 019:3B
6
10 RL6DV 003:3H:021:6B
9 FBRL6 020:3F
8
SG3

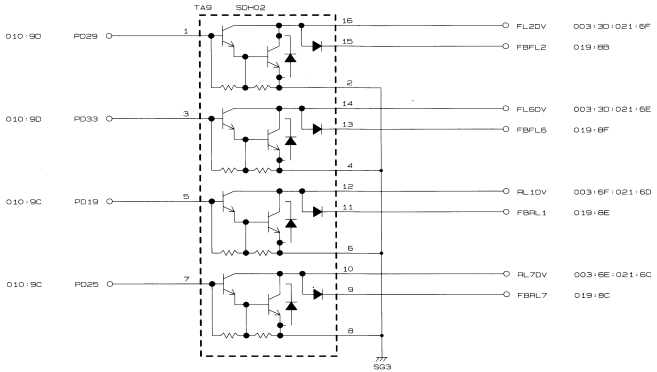
TA9 SDH02
010:9D PD29 1
010:9D PD33 3
010:9C PD19 5
010:9C PD25 7
16 FL2DV 003:3D:021:6F
15 FBFL2 019:8B
2
14 FL6DV 003:3D:021:6E
13 FBFL6 019:8F
4
12 RL1DV 003:6F:021:6D
11 FBRL1 019:8E
6
10 RL7DV 003:6E:021:6C
9 FBRL7 019:8C
8
SG3

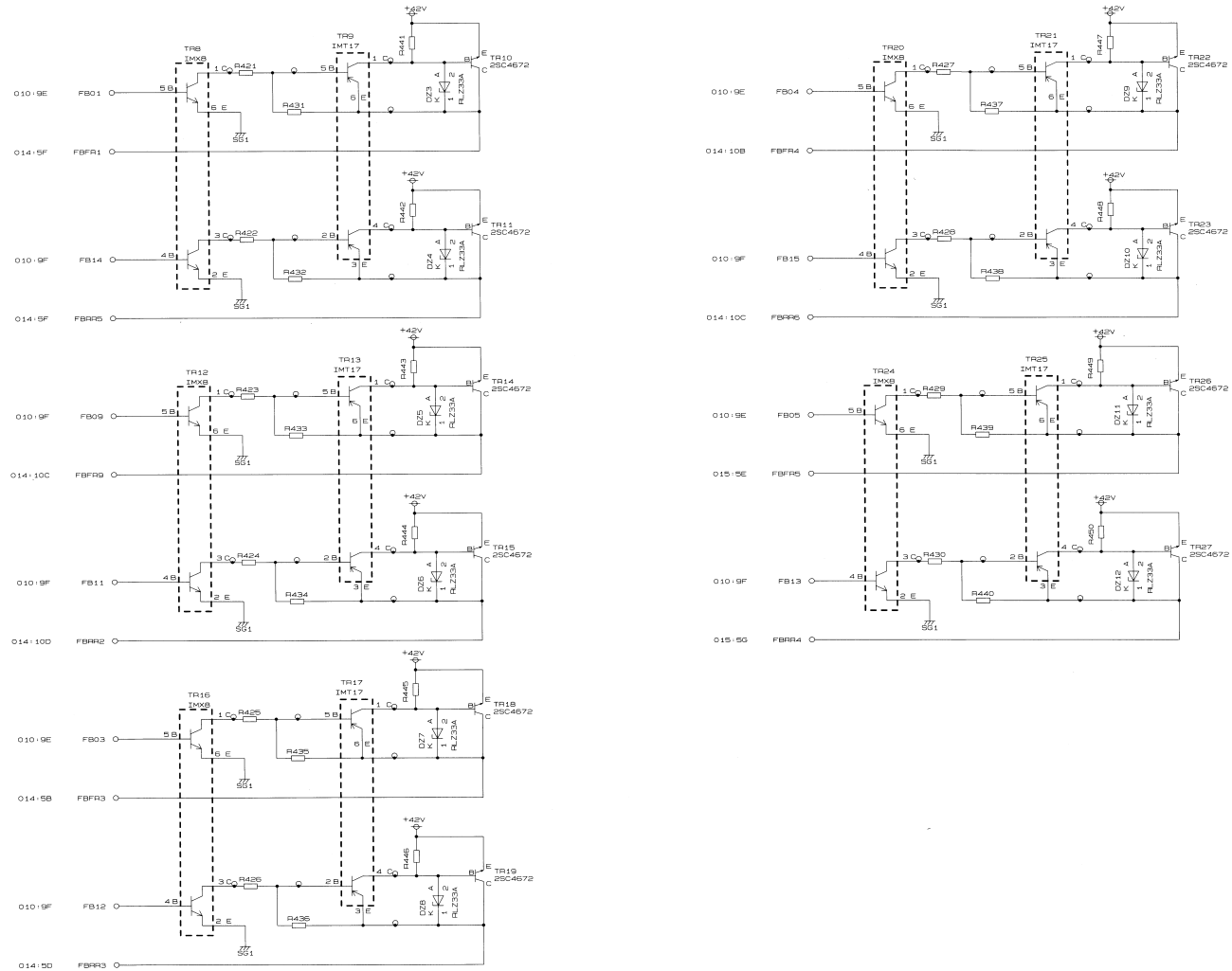
+42V
TR8
IMX8
TR9
IMT17
TR10
2SC4672
R421
R431
R441
DZ3
RLZ33A
010:9E
FB01
014:5F
FBFR1
TR11
2SC4672
R422
R432
R442
DZ4
RLZ33A
010:9F
FB14
014:5F
FBAR5
TR12
IMX8
TR13
IMT17
TR14
2SC4672
R423
R433
R443
DZ5
RLZ33A
010:9F
FB09
014:10C
FBFR9
TR15
2SC4672
R424
R434
R444
DZ6
RLZ33A
010:9F
FB11
014:10D
FBAR2
TR16
IMX8
TR17
IMT17
TR18
2SC4672
R425
R435
R445
DZ7
RLZ33A
010:9E
FB03
014:5B
FBFR3
TR19
2SC4672
R426
R436
R446
DZ8
RLZ33A
010:9F
FB12
014:5D
FBAR3
TR20
IMX8
TR21
IMT17
TR22
2SC4672
R427
R437
R447
DZ9
RLZ33A
010:9E
FB04
014:10B
FBFR4
TR23
2SC4672
R428
R438
R448
DZ10
RLZ33A
010:9F
FB15
014:10C
FBAR6
TR24
IMX8
TR25
IMT17
TR26
2SC4672
R429
R439
R449
DZ11
RLZ33A
010:9E
FB05
015:5E
FBFR5
TR27
2SC4672
R430
R440
R450
DZ12
RLZ33A
010:9F
FB13
015:5G
FBAR4
SG1

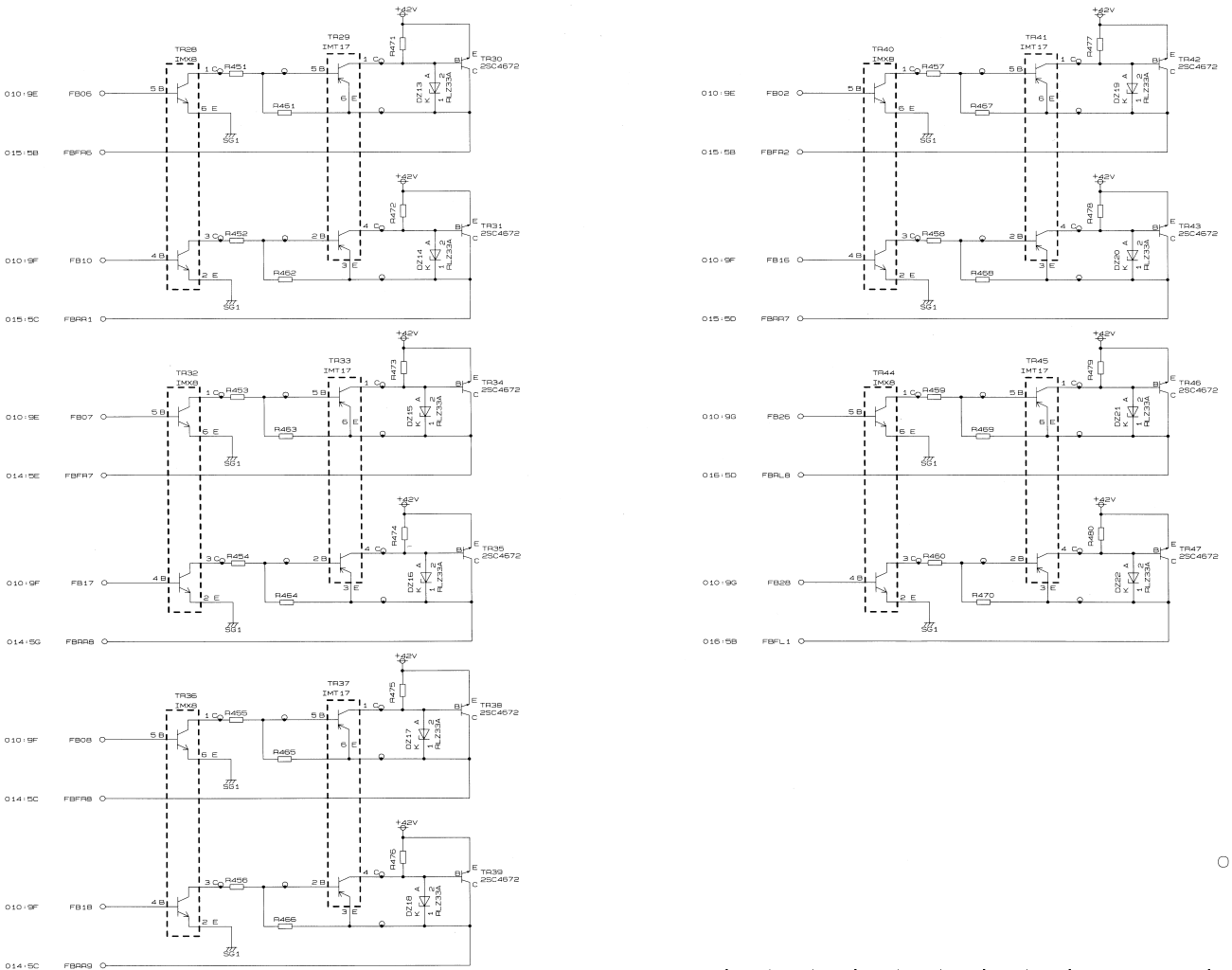
TR28
IMX8
TR29
IMT17
TR30
2SC4672
R451
R461
R471
DZ13
RLZ33A
FB06
FBFR6
TR31
2SC4672
R452
R462
R472
DZ14
RLZ33A
FB10
FBAR1
TR32
IMX8
TR33
IMT17
TR34
2SC4672
R453
R463
R473
DZ15
RLZ33A
FB07
FBFR7
TR35
2SC4672
R454
R464
R474
DZ16
RLZ33A
FB17
FBAR8
TR36
IMX8
TR37
IMT17
TR38
2SC4672
R455
R465
R475
DZ17
RLZ33A
FB08
FBFR8
TR39
2SC4672
R456
R466
R476
DZ18
RLZ33A
FB18
FBAR9
TR40
IMX8
TR41
IMT17
TR42
2SC4672
R457
R467
R477
DZ19
RLZ33A
FB02
FBFR2
TR43
2SC4672
R458
R468
R478
DZ20
RLZ33A
FB16
FBAR7
TR44
IMX8
TR45
IMT17
TR46
2SC4672
R459
R469
R479
DZ21
RLZ33A
FB26
FBAL8
TR47
2SC4672
R460
R470
R480
DZ22
RLZ33A
FB28
FBFL1
+42V
SG1

018

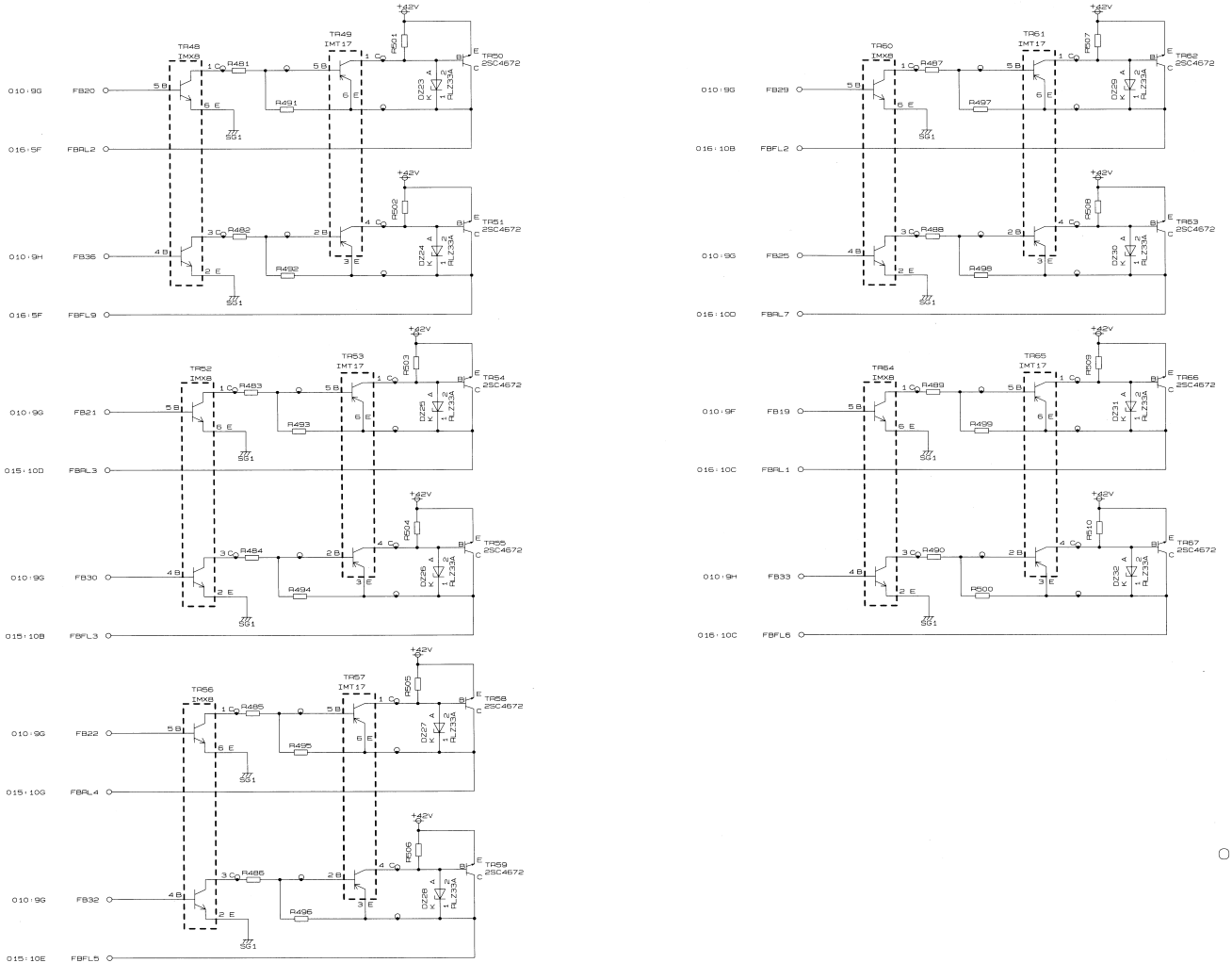

010:9G FB20
016:5F FBRL2
010:9H FB36
016:5F FBFL9
010:9G FB21
015:10D FBRL3
010:9G FB30
015:10B FBFL3
010:9G FB22
015:10G FBRL4
010:9G FB32
015:10E FBFL5
010:9G FB29
016:10B FBFL2
010:9G FB25
016:10D FBRL7
010:9F FB19
016:10C FBRL1
010:9H FB33
016:10C FBFL6
TR48 IMX8
TR49 IMT17
TR50 2SC4672
TR51 2SC4672
TR52 IMX8
TR53 IMT17
TR54 2SC4672
TR55 2SC4672
TR56 IMX8
TR57 IMT17
TR58 2SC4672
TR59 2SC4672
TR60 IMX8
TR61 IMT17
TR62 2SC4672
TR63 2SC4672
TR64 IMX8
TR65 IMT17
TR66 2SC4672
TR67 2SC4672
+42V
SG1
RLZ33A

019

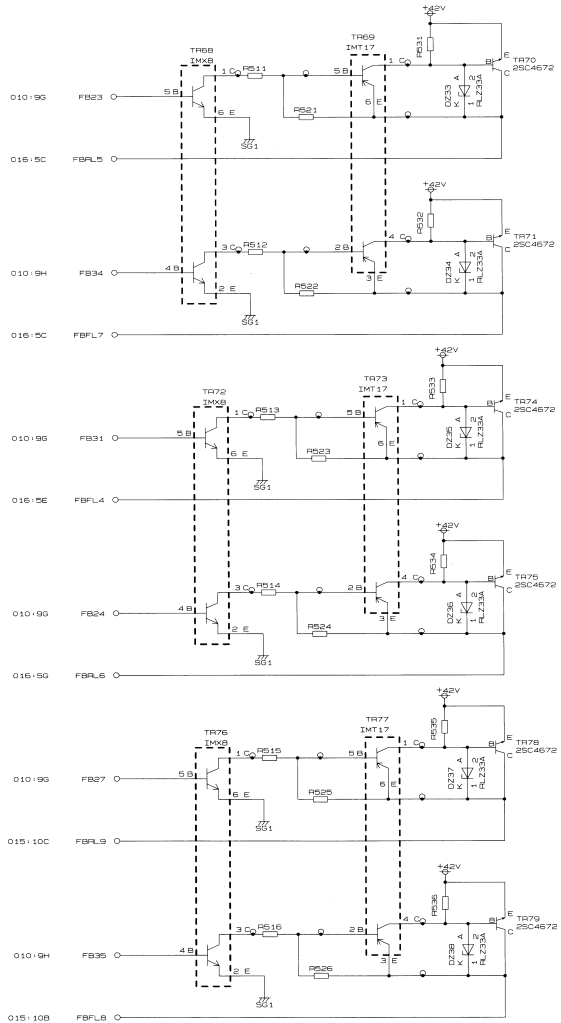
+42V
TR68
IMX8
TR69
IMT17
TR70
2SC4672
R511
R521
R531
D233
RL233A
010:9G
FB23
015:5C
FBRL5
TR71
2SC4672
R512
R522
R532
D234
RL233A
010:9H
FB34
015:5C
FBFL7
TR72
IMX8
TR73
IMT17
TR74
2SC4672
R513
R523
R533
D235
RL233A
010:9G
FB31
015:5E
FBFL4
TR75
2SC4672
R514
R524
R534
D236
RL233A
010:9G
FB24
015:5G
FBRL6
TR76
IMX8
TR77
IMT17
TR78
2SC4672
R515
R525
R535
D237
RL233A
010:9G
FB27
015:10C
FBRL9
TR79
2SC4672
R516
R526
R536
D238
RL233A
010:9H
FB35
015:10B
FBFL8
SG1

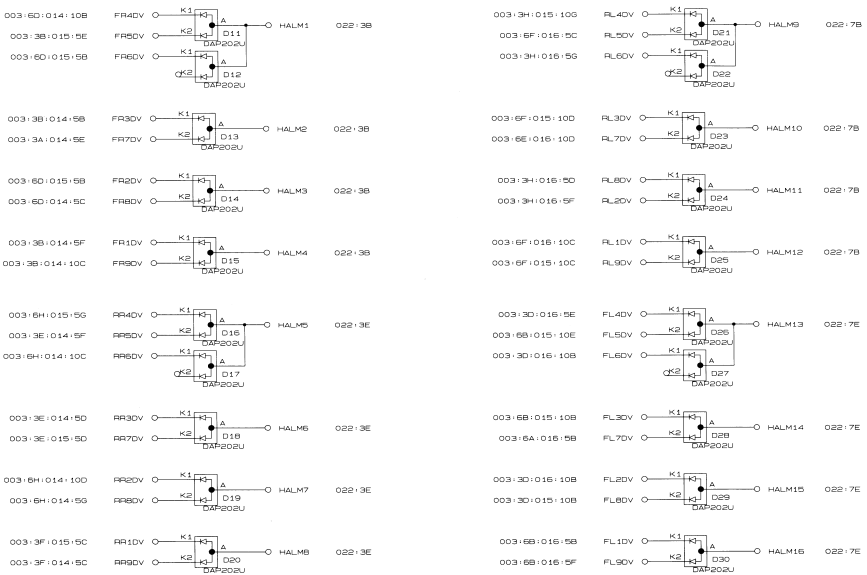
003:6D:014:10B
FR4DV
K1
K3
A
D11
DAP202U
HALM1
022:3B
003:3B:015:5E
FR5DV
K2
003:6D:015:5B
FR6DV
D12
003:3B:014:5B
FR3DV
D13
HALM2
003:3A:014:5E
FR7DV
003:6D:015:5B
FR2DV
D14
HALM3
003:6D:014:5C
FR8DV
003:3B:014:5F
FR1DV
D15
HALM4
003:3B:014:10C
FR9DV
003:6H:015:5G
RR4DV
D16
HALM5
003:3E:014:5F
RR5DV
003:6H:014:10C
RR6DV
D17
003:3E:014:5D
RR3DV
D18
HALM6
003:3E:015:5D
RR7DV
003:6H:014:10D
RR2DV
D19
HALM7
003:6H:014:5G
RR8DV
003:3F:015:5C
RR1DV
D20
HALM8
003:3F:014:5C
RR9DV
003:3H:015:10G
RL4DV
D21
HALM9
022:7B
003:6F:016:5C
RL5DV
003:3H:016:5G
RL6DV
D22
003:6F:015:10D
RL3DV
D23
HALM10
003:6E:016:10D
RL7DV
003:3H:016:5D
RL8DV
D24
HALM11
003:3H:016:5F
RL2DV
003:6F:016:10C
RL1DV
D25
HALM12
003:6F:015:10C
RL9DV
003:3D:016:5E
FL4DV
D26
HALM13
022:7E
003:6B:015:10E
FL5DV
003:3D:016:10B
FL6DV
D27
003:6B:015:10B
FL3DV
D28
HALM14
003:6A:016:5B
FL7DV
003:3D:016:10B
FL2DV
D29
HALM15
003:3D:015:10B
FL8DV
003:6B:016:5B
FL1DV
D30
HALM16
003:6B:016:5F
FL9DV

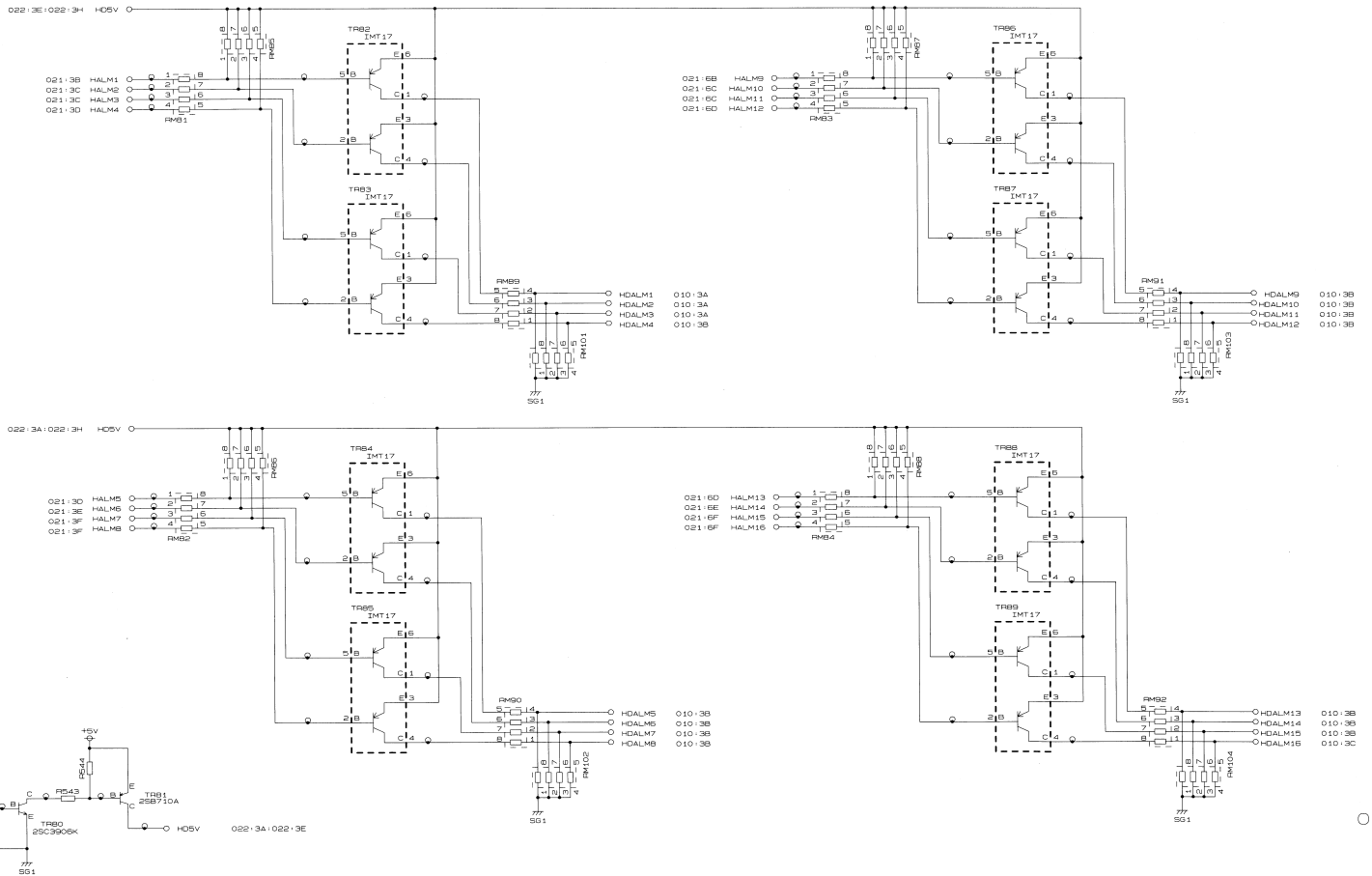
022:3E:022:3H HD5V
RM85
TR82
IMT17
TR83
IMT17
RM81
021:3B HALM1
021:3C HALM2
021:3C HALM3
021:3D HALM4
RM89
HDALM1 010:3A
HDALM2 010:3A
HDALM3 010:3A
HDALM4 010:3B
RM101
SG1
RM86
TR86
IMT17
TR87
IMT17
RM83
021:6B HALM9
021:6C HALM10
021:6C HALM11
021:6D HALM12
RM91
HDALM9 010:3B
HDALM10 010:3B
HDALM11 010:3B
HDALM12 010:3B
RM103
SG1
022:3A:022:3H HD5V
RM85
TR84
IMT17
TR85
IMT17
RM82
021:3D HALM5
021:3E HALM6
021:3F HALM7
021:3F HALM8
RM90
HDALM5 010:3B
HDALM6 010:3B
HDALM7 010:3B
HDALM8 010:3B
RM102
SG1
RM88
TR88
IMT17
TR89
IMT17
RM84
021:6D HALM13
021:6E HALM14
021:6F HALM15
021:6F HALM16
RM92
HDALM13 010:3B
HDALM14 010:3B
HDALM15 010:3B
HDALM16 010:3C
RM104
SG1
+42V
RS41
RS42
TR80
2SC3906K
SG1
+5V
RS44
RS43
TR81
2SB710A
HD5V
022:3A:022:3E

022

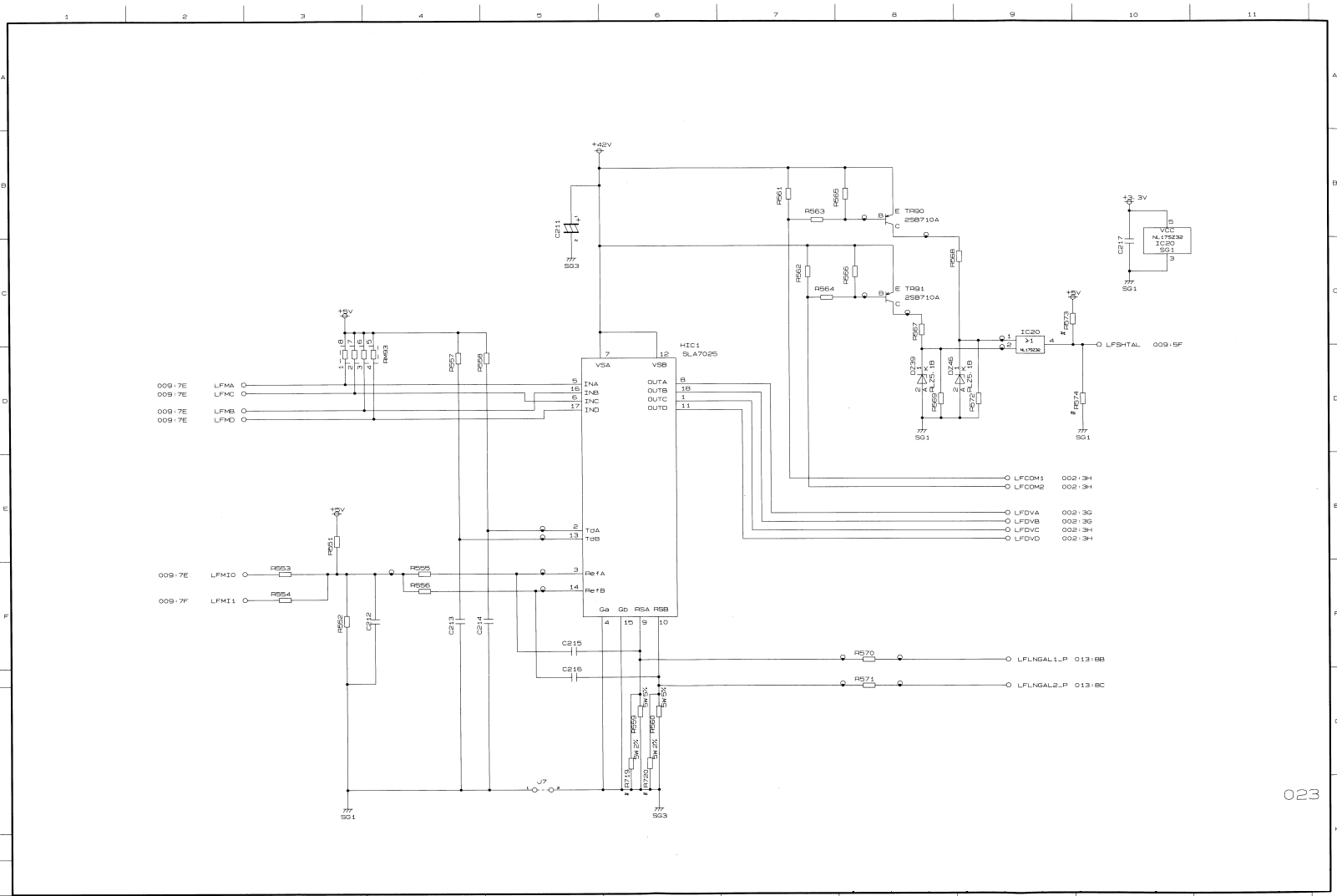

+42V
C211
SG3
R561
R565
R563
TR90
2SB710A
R562
R566
R564
TR91
2SB710A
R568
R567
+3.3V
C217
VCC
NL175Z32
IC20
SG1
+5V
R573
IC20
NL175Z32
LFSHTAL 009:5F
D239
D246
R569
R572
R574
SG1
HIC1
SLA7025
VSA
VSB
INA
INB
INC
IND
OUTA
OUTB
OUTC
OUTD
TdA
TdB
RefA
RefB
Ga
Gb
RSA
RSB
009:7E LFMA
009:7E LFMC
009:7E LFMB
009:7E LFMD
R593
R557
R558
LFCOM1 002:3H
LFCOM2 002:3H
LFDVA 002:3G
LFDVB 002:3G
LFDVC 002:3H
LFDVD 002:3H
R551
009:7E LFMI0
009:7F LFMI1
R553
R554
R555
R556
R552
C212
C213
C214
C215
C216
R570
R571
LFLNGAL1_P 013:8B
LFLNGAL2_P 013:8C
R559
R560
R719
R720
J7
SG1
SG3

023

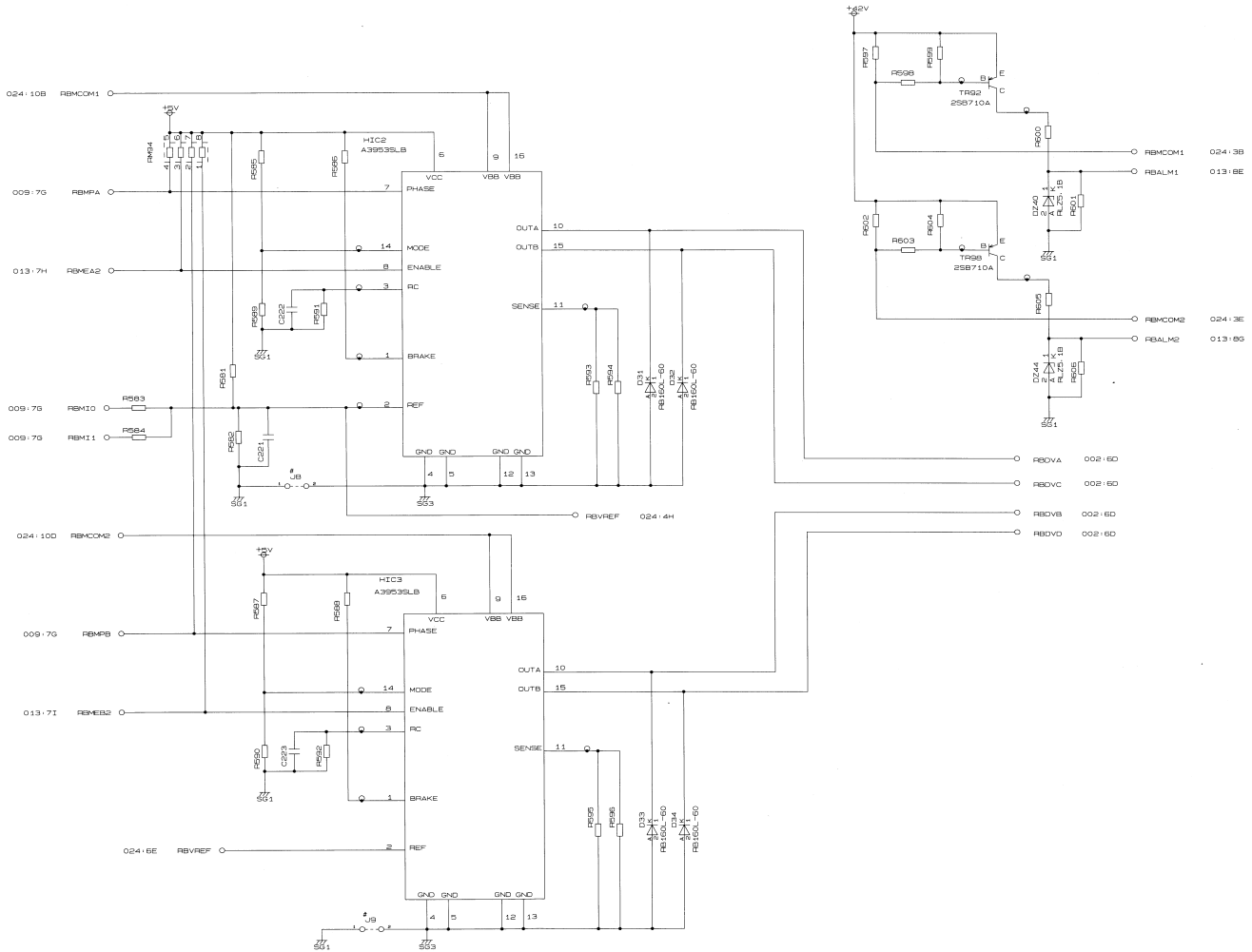
024:10B RBMCOM1
+5V
RM94
009:7G RBMPA
013:7H RBMEA2
009:7G RBMI0
009:7G RBMI1
R583
R584
HIC2
A3953SLB
VCC
PHASE
MODE
ENABLE
RC
BRAKE
REF
GND GND
GND GND
VBB VBB
OUTA
OUTB
SENSE
R585
R586
R589
C222
R591
R581
R582
C221
J8
SG1
SG3
R593
R594
D31
RB160L-60
D32
RB160L-60
RBVREF 024:4H
024:10D RBMCOM2
009:7G RBMPB
013:7I RBMEB2
024:6E RBVREF
HIC3
A3953SLB
R587
R588
R590
C223
R592
R595
R596
D33
RB160L-60
D34
RB160L-60
J9
+42V
R597
R598
R599
TR92
2SB710A
R600
RBMCOM1 024:3B
RBALM1 013:8E
D240
RL25.1B
R601
R602
R603
R604
TR98
2SB710A
R605
RBMCOM2 024:3E
RBALM2 013:8G
D244
RL25.1B
R606
RBOVA 002:6D
RBOVC 002:6D
RBOVB 002:6D
RBOVD 002:6D
024

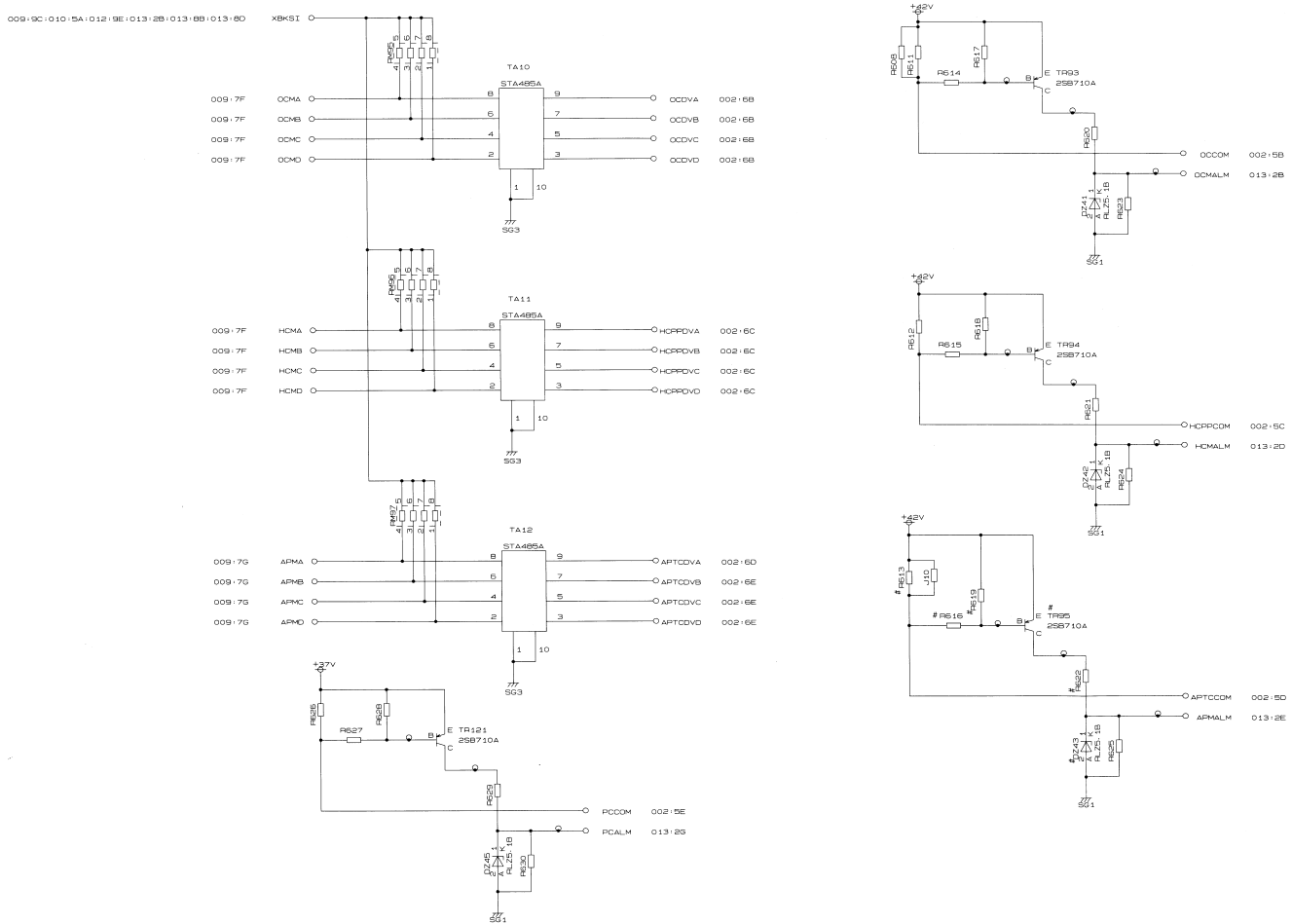
009:9C:010:5A:012:9E:013:28:013:88:013:8D
XBKSI
R605
TA10
STA485A
009:7F OCMA
009:7F OCMB
009:7F OCMC
009:7F OCMD
OCDVA 002:6B
OCDVB 002:6B
OCDVC 002:6B
OCDVD 002:6B
SG3
TA11
STA485A
009:7F HCMA
009:7F HCMB
009:7F HCMC
009:7F HCMD
HCPPDVA 002:6C
HCPPDVB 002:6C
HCPPDVC 002:6C
HCPPDVD 002:6C
SG3
TA12
STA485A
009:7G APMA
009:7G APMB
009:7G APMC
009:7G APMD
APTCDVA 002:6D
APTCDVB 002:6E
APTCDVC 002:6E
APTCDVD 002:6E
SG3
+17V
R626
R627
R628
TR121
2SB710A
R629
PCCOM 002:5E
PCALM 013:2G
D245
R630
SG1
+42V
R608
R611
R614
R617
TR93
2SB710A
R620
OCCOM 002:5B
OCMALM 013:2B
D241
R623
SG1
+42V
R612
R615
R618
TR94
2SB710A
R621
HCPPCOM 002:5C
HCMALM 013:2D
D242
R624
SG1
+42V
R613
J10
R619
TR95
2SB710A
R622
APTCCOM 002:5D
APMALM 013:2E
D243
R625
SG1

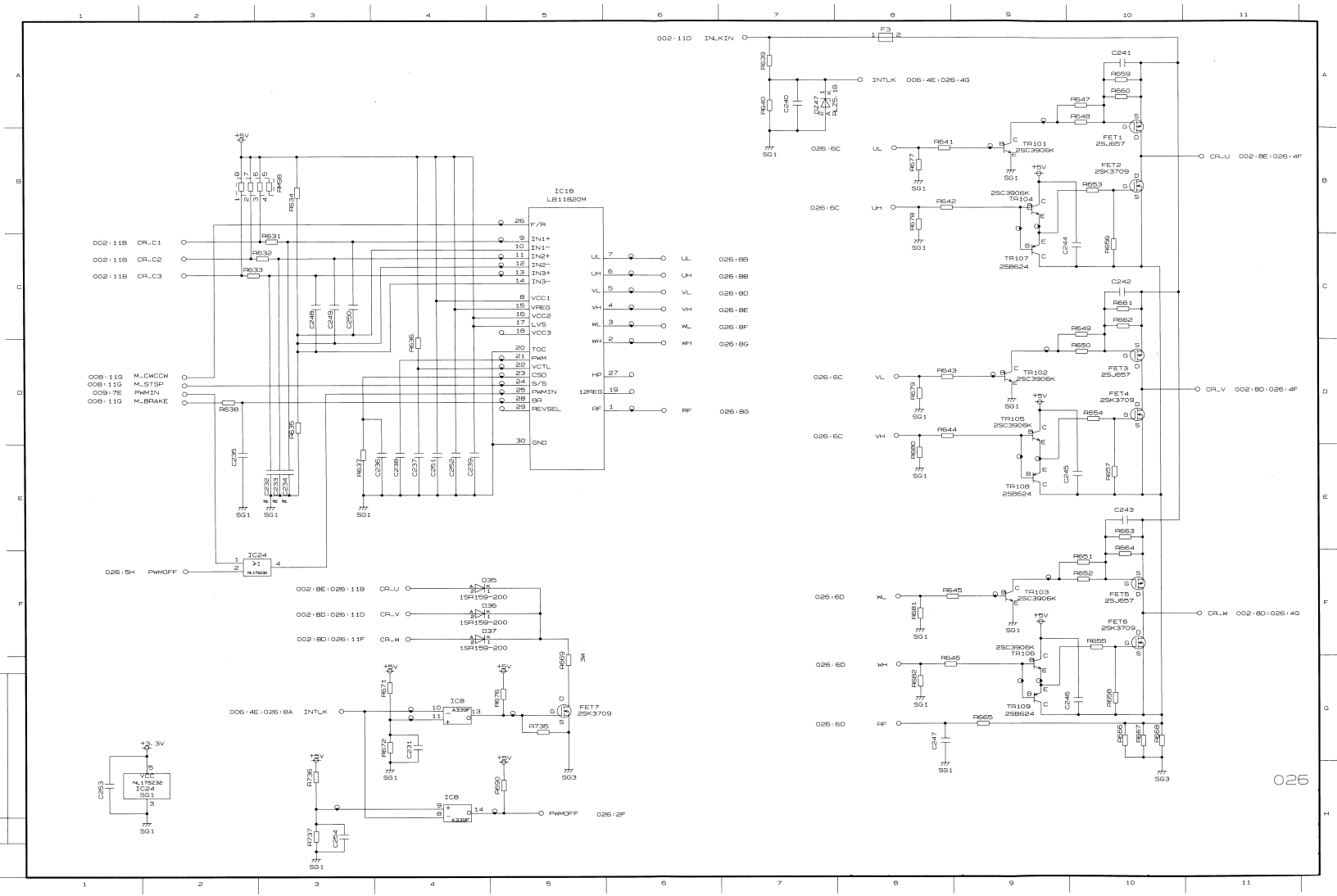

IC18
LB11820M
F/R
IN1+
IN1-
IN2+
IN2-
IN3+
IN3-
VCC1
VREG
VCC2
LVS
VCC3
TOC
PWM
VCTL
CSD
S/S
PWMIN
BR
REVSEL
GND
UL
UH
VL
VH
WL
WH
HP
12REG
RF
026:8B
026:8D
026:8E
026:8F
026:8G
002:11B CR_C1
002:11B CR_C2
002:11B CR_C3
008:11G M_CWCCW
008:11G M_STSP
009:7E PWMIN
008:11G M_BRAKE
026:5H PWMOFF
IC24
002:8E:026:11B CR_U
002:8D:026:11D CR_V
002:8D:026:11F CR_W
D35
1SR159-200
D36
1SR159-200
D37
1SR159-200
006:4E:026:8A INTLK
IC8
A339F
FET7
2SK3709
PWMOFF 026:2F
+3.3V
VCC
NL17SZ32
IC24
SG1
SG3
+5V
002:11D INLKIN
F3
INTLK 006:4E:026:4G
026:6C UL
026:6C UH
026:6C VL
026:6C VH
026:6D WL
026:6D WH
026:6D RF
TR101
2SC3906K
TR104
2SC3906K
TR107
2SB624
TR102
2SC3906K
TR105
2SC3906K
TR108
2SB624
TR103
2SC3906K
TR106
2SC3906K
TR109
2SB624
FET1
2SJ657
FET2
2SK3709
FET3
2SJ657
FET4
2SK3709
FET5
2SJ657
FET6
2SK3709
CR_U 002:8E:026:4F
CR_V 002:8D:026:4F
CR_W 002:8D:026:4G
026

7.4 Component Layout

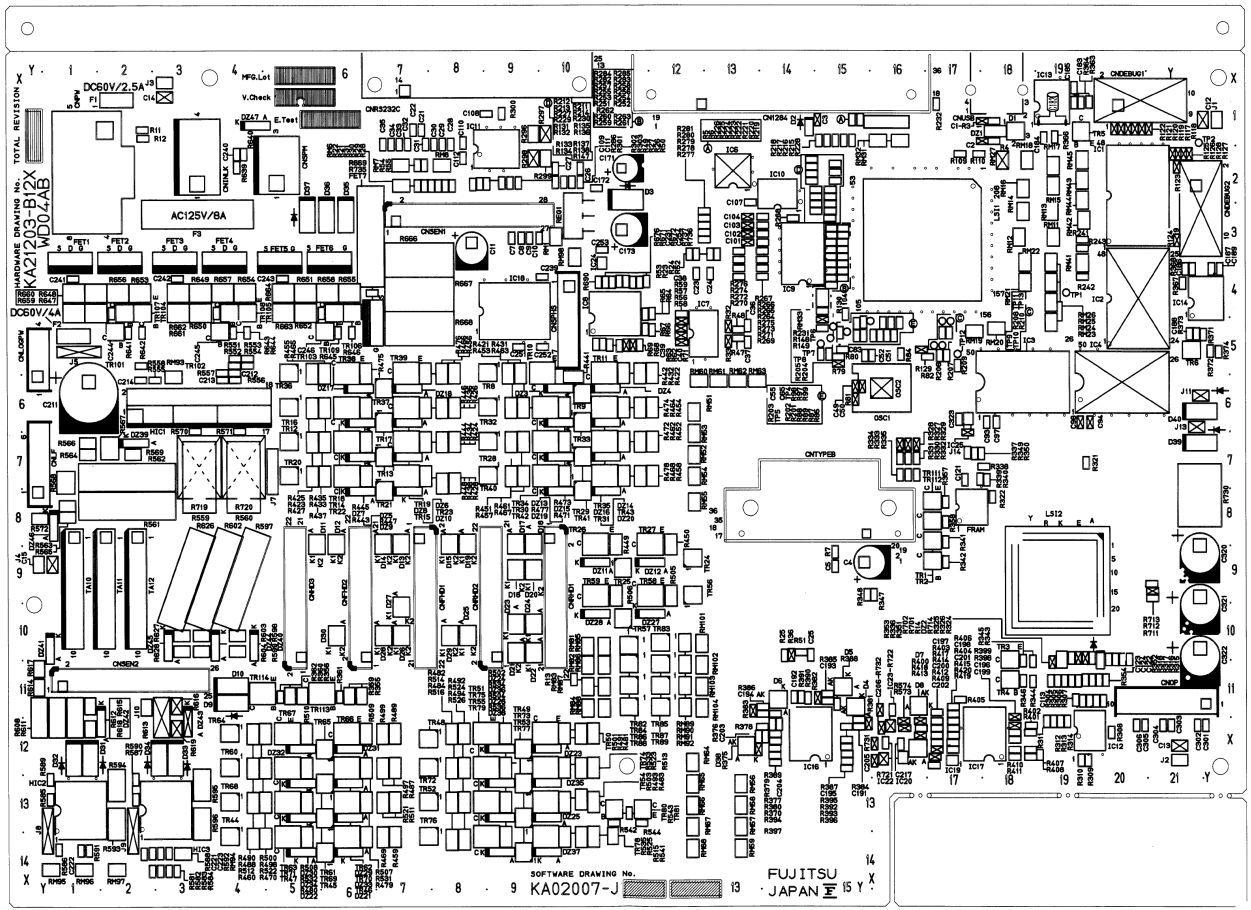

7.5 Exploded diagrams

The following pages contain the exploded diagrams below:

- Exploded Diagram for DFX-9000 CASE (1)
- Exploded Diagram for DFX-9000 ELEC (2)
- Exploded Diagram for DFX-9000 MECHA (3)
- Exploded Diagram for DFX-9000 MECHA (4)
- Exploded Diagram for DFX-9000 MECHA (5)

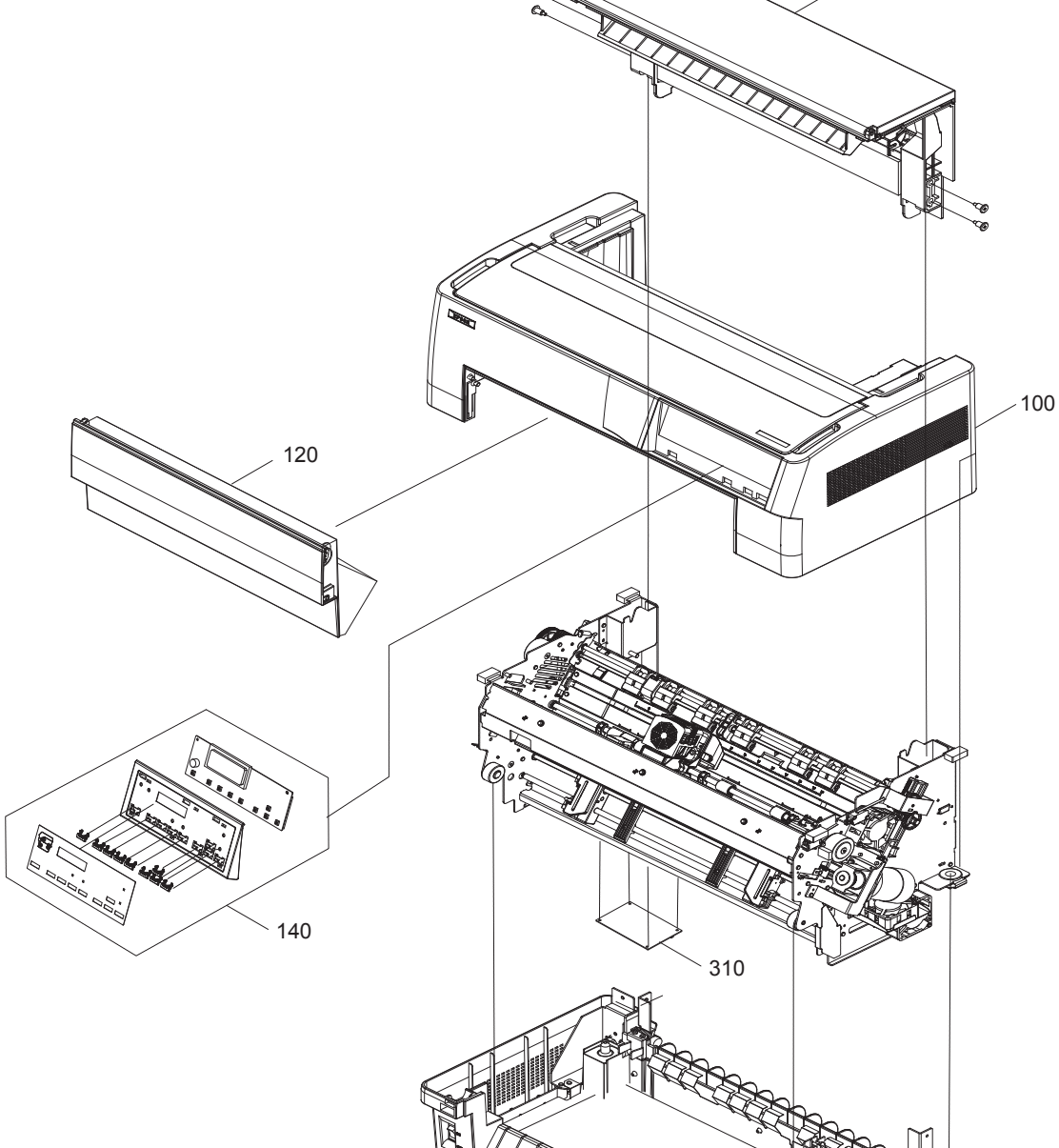
100
120
140
310

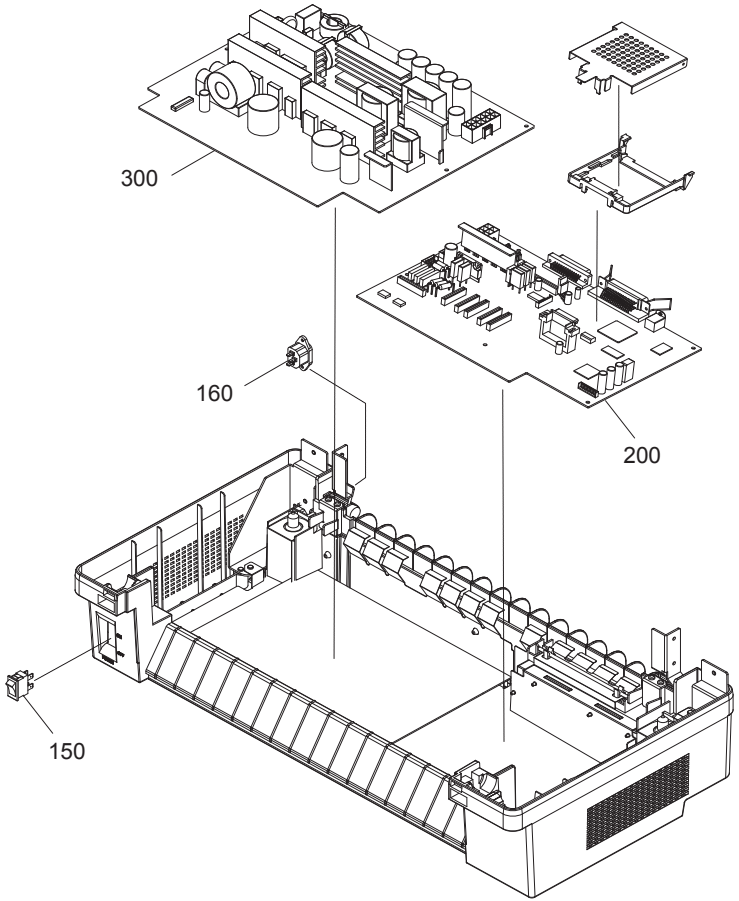

The parts to which no reference number

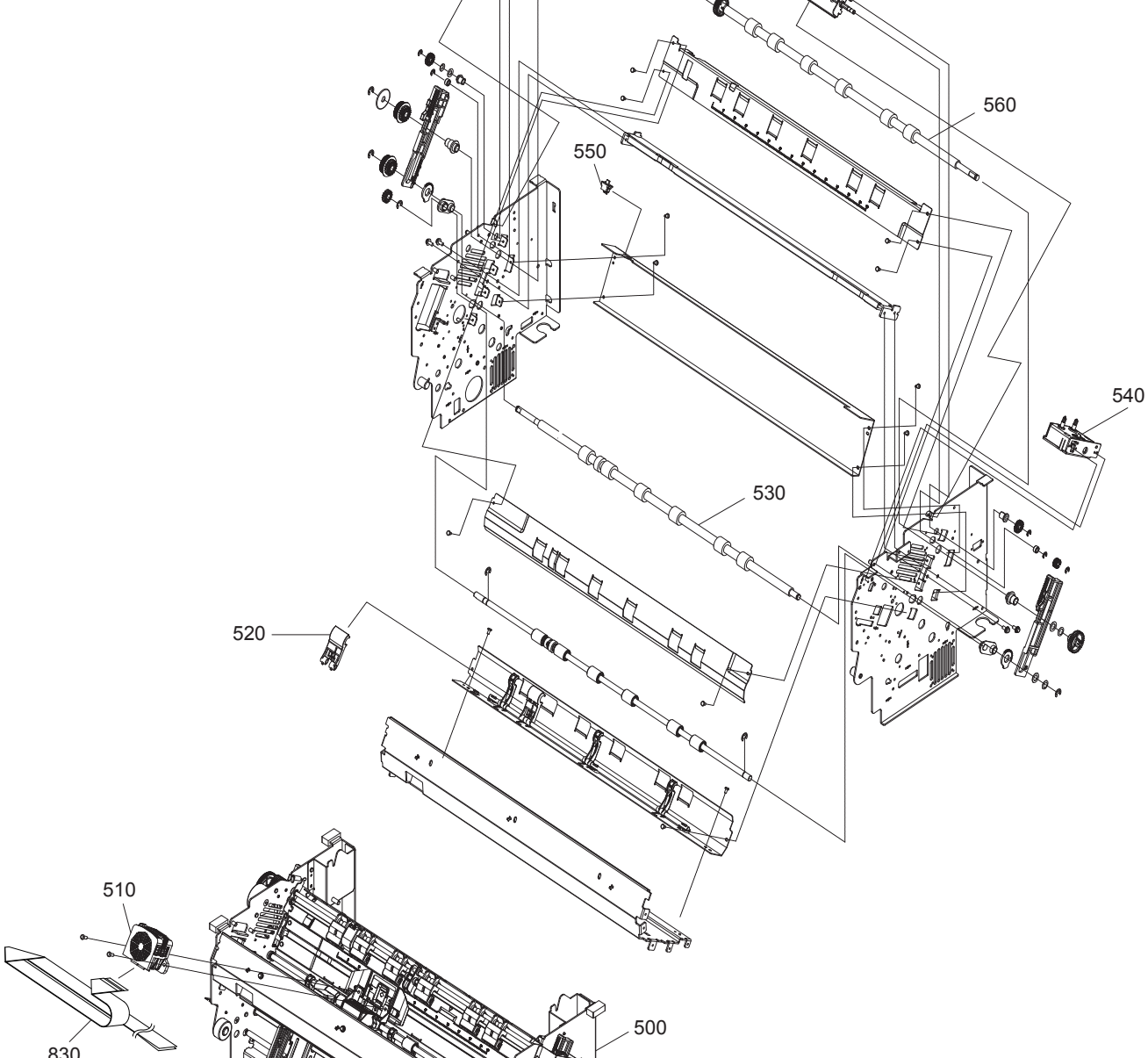
560
550
540
530
520
510
500
830

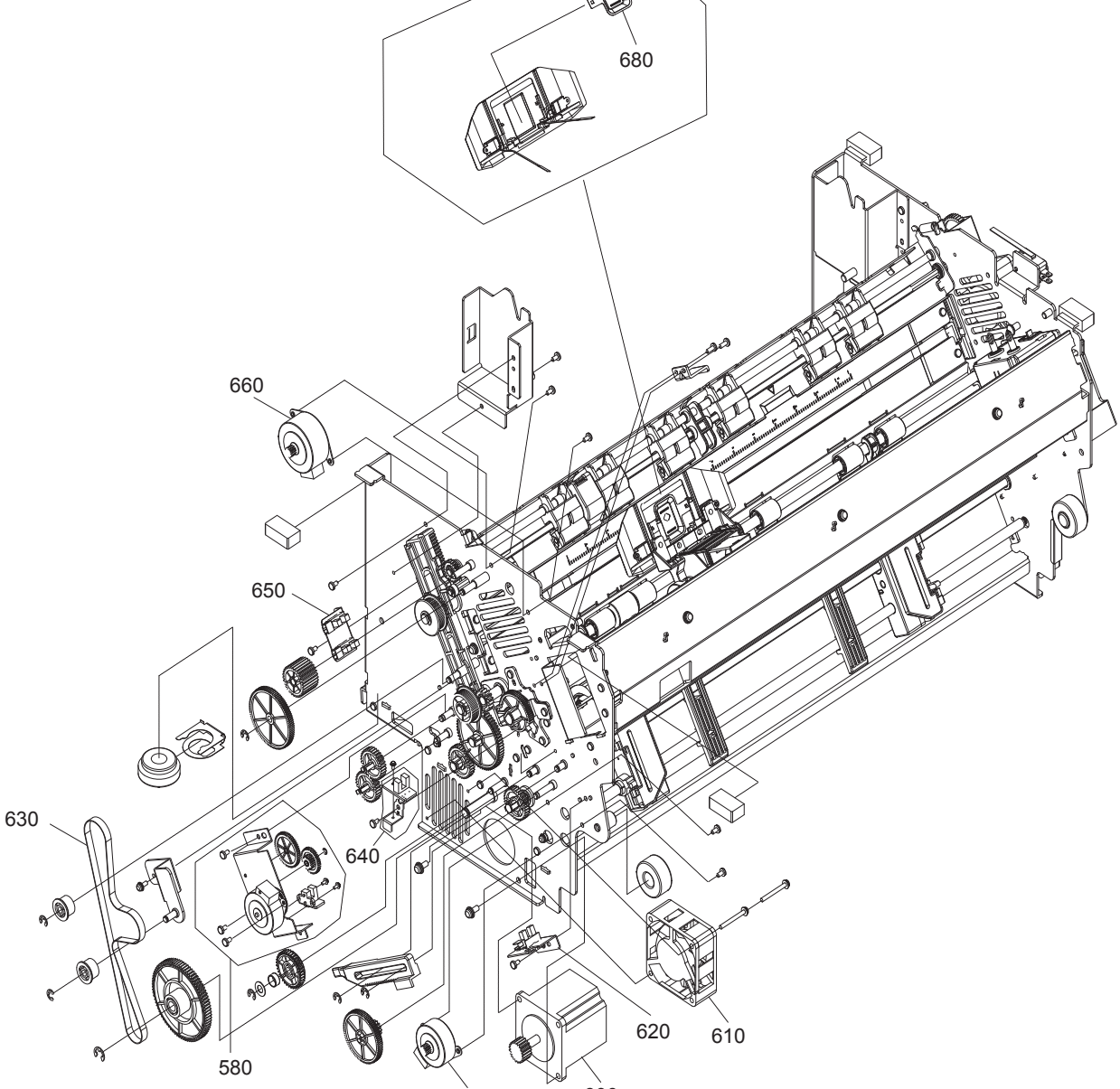
680
660
650
630
640
620
610
580

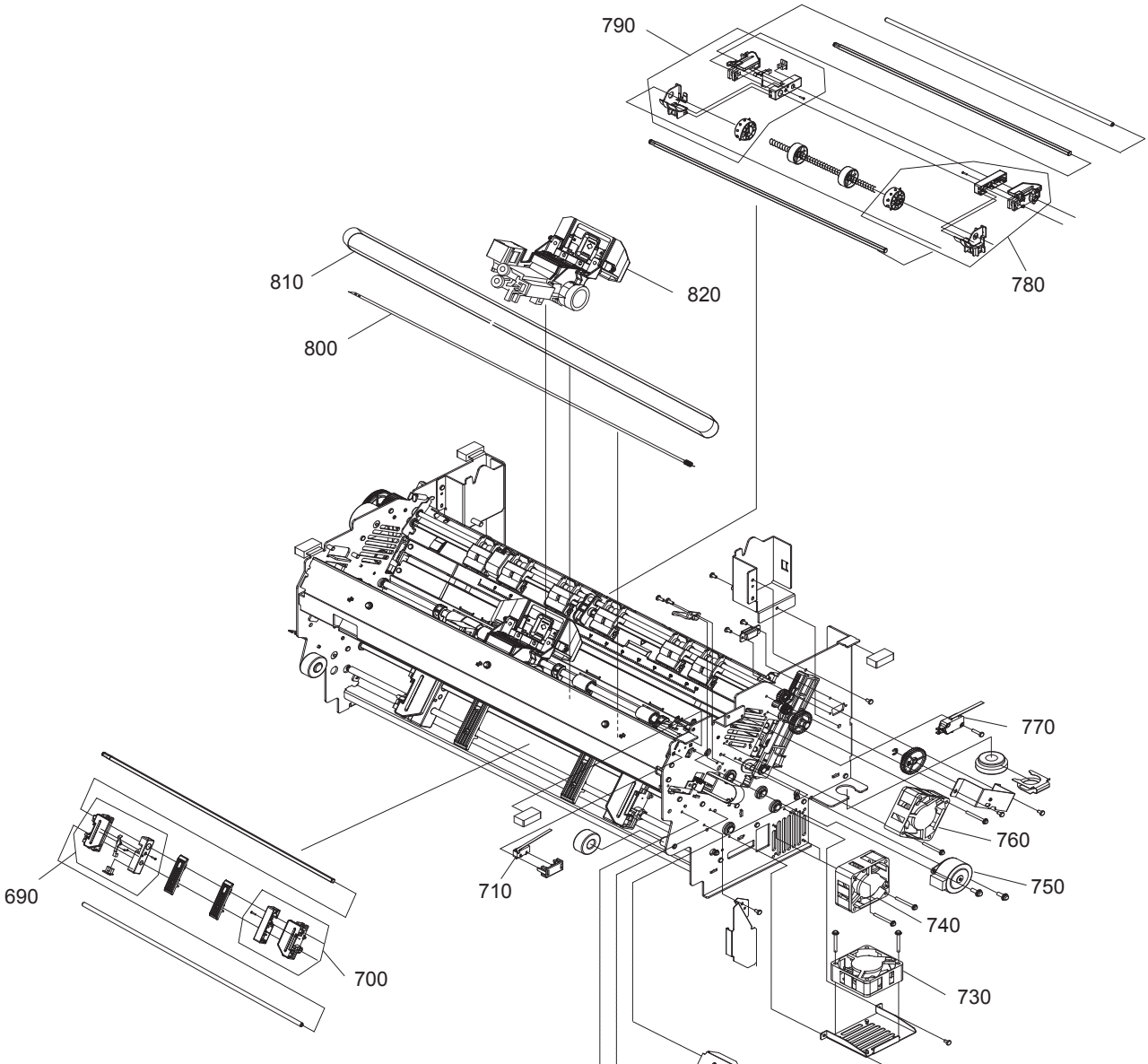
790
780
810
820
800
770
760
750
740
730
710
690
700

7.6 Parts list

Table 7-16. Parts List

No.	Part Name
Not shown	SOFTWARE CD,E
Not shown	SETTING UP MANUAL
100	UPPER UNIT
110	REAR UNIT
120	FRONT COVER ASY
130	LOWER UNIT
150	AC SW ASY
160	INLET ASY
140	OP UNIT
200	ROM BOARD
300	POWER UNIT
310	SENSOR BOARD UNIT
500	PR MECHA ASY
510	PRINT HEAD
520	PJS HOLDER ASY
530	DV ROLLER F ASY
540	RF UNIT
550	PTRM SWITH ASY
560	DV ROLLER R UNIT
570	TPE HOLDER ASY
580	APTC UNIT

Table 7-16. Parts List (continued)

No.	Part Name
590	HCPP MOTOR
600	LF MOTOR
610	FAN1 MOTOR
620	HCPP SENSOR UNIT
630	LF BELT
640	APTC HP UNIT
650	OC SENSOR BR UNIT
660	OC MOTOR
670	CARD GUIDE ASY
680	MASK
690	TRACTOR FL UNIT
700	TRACTOR FR UNIT
710	CO SW ASY
720	SP MOTOR ASY
730	FAN3 MOTOR
740	FAN2 MOTOR
750	RF MOTOR
760	FAN4 MOTOR
770	INLK SW ASY
780	TRACTOR RR UNIT
790	TRACTOR RL UNIT
800	CES SCALE

Table 7-16. Parts List (continued)

No.	Part Name
810	SP BELT
820	CARRIER UNIT
830	CARRIER CABLE UNIT
Not shown	PSU1 CABLE ASY
Not shown	OP CABLE